Secutron™

# MR-400

## Addressable Fire Alarm Control Panel


**All MGC MIX-4000 Series Detectors are not FM Approved**

Installation and Operation Manual

LT-6671SEC Rev. 2
November 2023

# Table of Contents

# List of Figures

# List of Tables

# 1.0 FCC Notice

**Attention: Users should not attempt to make such connections themselves, but should contact the appropriate electric inspection authority, or electrician, as appropriate.**

## 1.1 Notice for all MR-400 Series Built-in UDACTs Sold in the U.S.A.

**Notes:** The Ringer Equivalence Number (REN) assigned to each terminal device provides an indication of the maximum number of terminals allowed to be connected to a telephone interface. The termination on an interface may consist of any combination of devices subject only to the requirement that the sum of the Ringer Equivalence Numbers of all the devices does not exceed 5.

The Label Identification Number for this product is US:6OTAL01BMR3500. The 01B represents the REN without a decimal point (for example, 01B is a REN of 0.1B).

Secutron's MR-400 SERIES BUILT-IN UDACT Digital Communicator described in this manual is listed by Underwriters Laboratories Inc. (ULI) for use in slave application in conjunction with a Listed Fire Alarm Control Panel under Standard 864 (Control Units for Fire Protective Signalling Systems). These Communicators comply with the National Fire Protection Association (NFPA) performance requirements for UDACTs and should be installed in accordance with NFPA 72 (Supervising Station Fire Alarm System). These Communicators should be installed in accordance with this manual; the National Electrical Code (NFPA 70); and/or the local Authority Having Jurisdiction (AHJ).

## 1.2 FCC Notice

This equipment complies with Part 68 of the FCC rules and the requirements adopted by the ACTA. On the telco transformer of this equipment is a label that contains, among other information, a product identifier in the format US:6OTAL01BMR3500. If requested, this number must be provided to the telephone company. This equipment is capable of seizing the line. This capability is provided in the hardware.

### Type of Service

The Communicator is designed to be used on standard device telephone lines. It connects to the telephone line by means of a standard jack called the USOC RJ-11C (or USOC FJ45S). Connection to telephone company provided coin service (central office implemented systems) is prohibited. Connection to party lines service is subject to state tariffs.

### Telephone Company Procedures

The goal of the telephone company is to provide you with the best service it can. In order to do this, it may occasionally be necessary for them to make changes in their equipment, operations or procedures. If these changes might affect your service or the operation of your equipment, the telephone company will give you notice, in writing, to allow you to make any changes necessary to maintain uninterrupted service. In certain circumstances, it may be necessary for the telephone company to request information from you concerning the

equipment which you have connected to your telephone line. Upon request of the telephone company, provide the FCC registration number and the ringer equivalence number (REN); both of these items are listed on the equipment label. The sum of all of the REN's on your telephone lines should be less than five in order to assure proper service from the telephone company. In some cases, a sum of five may not be usable on a given line.

**If Problems Arise**

If any of your telephone equipment is not operating properly, you should immediately remove it from your telephone line, as it may cause harm to the telephone network. If the telephone company notes a problem, they may temporarily discontinue service. When practical, they will notify you in advance of this disconnection. If advance notice is not feasible, you will be notified as soon as possible. When you are notified, you will be given the opportunity to correct the problem and informed of your right to file a complaint with the FCC. Contact your telephone company if you have any questions about your phone line. For device repairs or replacements, please visit our RMA Request page to submit your request.

https://mircom.com/technical-support/submit-return-material-authorization-form/

**All MGC MIX-4000 Series Detectors are not FM Approved**

# 2.0 Introduction

This document provides information for the successful installation and operation of the MR-400 Addressable Fire Alarm Control Panel (FACP).

## 2.1 The MR-400 Addressable Fire Alarm Control Panel

Secutron's MR-400 Addressable Fire Alarm Control Panel provides the following:

- Addressable Protocol with one addressable (SLC) loop with a maximum of 240 Addressable devices (MRI-4000 series) in total.
- Compatible with Addressable devices (MRI-4000 series).
- Compatible with conventional detectors using Addressable MRI-4042 Analog Interface (Conventional Zone) module; refer to document LT-1023SEC for compatible conventional detectors.
- Four Power Limited Class B or Class A NAC circuits rated at 1.5A each, 5.0A total.
- NAC circuits may be configured as silenceable signal, non-silenceable signal, silenceable strobes, non-silenceable strobes, or relay output. The audible signal may be Steady, Temporal Code, California Code, or March Time.
- Supports sync strobe protocols from major manufacturers.
- Supports Addressable 400 Series NAC devices.
- Alarm verification and positive alarm sequence operations.
- Configurable Signal Silence Inhibit, Auto Signal Silence, and One-Man Walk Test.
- Subsequent Alarm, Supervisory, Monitor and Trouble operation.
- Relay Contacts for Common Alarm, Common Supervisory and Common Trouble all non-disconnectable and Auxiliary Alarm Relay (disconnectable).
- Built-in Dialer.

### 2.1.1 Optional Items

- Supports up to 2 RAX-1048TZDS Display Adder Modules.
- Semi-flush or surface mountable enclosures for retrofits and new installations.

**Note:** Installation of the MR-400 Addressable Fire Alarm Control panel should be in accordance with National Electrical Code NFPA 70 and NFPA 72. Final acceptance subject to the Local Authority Having Jurisdiction (AHJ).

## 2.2 General Notes

### Circuits

Refers to a physical electrical interface for the analog loop, indicating signals or relays, and common alarm, supervisory, and trouble relay outputs.

### Zone/Group

Is a logical concept for a Fire Alarm Protected Area, and will consist of at least one Circuit. The MR-400 uses zones to facilitate annunciation of multiple input and output points on the RAX-1048TZDS (up to 96 points) and to facilitate the indication of bypass points.

### Display Points

The MR-400 LCD display annunciates the status of the system and connected devices. There are up to two (2) RAX-1048TZDS Display Adder Module Display points that may be configured to assign LEDs to groups of inputs or outputs. There are two LEDs for every display point; one single color (yellow) and one dual color (red/yellow).

### Wiring Styles

The addressable (SLC) loop can be configured system-wide as Class B or Class A . With the addition of isolators, a Class A loop will become a Class X.

# 3.0 MR-400 Overview

This chapter lists all the possible components of an MR-400 addressable fire alarm control system.

## 3.1 MR-400 Addressable Fire Alarm Control Panel Model

The MR-400 Addressable Fire Alarm Control Panel has the following features:

- Main Board, Power Supply and Backbox.
- Addressable fire alarm control panel.
- Main Display with 4 x 20 LCD display.
- One Class A, Class X, or Class B SLC analog loop.
- Four Power Limited Class B or Class A NAC circuits (max 1.5 Amps each - 5.0 Amps total).
- Addressable Protocol with up to 240 Addressable devices (MRI-4000 series).
- Dedicated common alarm, supervisory, trouble, and auxiliary alarm relays.
- Additional RAX-1048TZDS Display Adder Module can be added to provide 48 annunciation points per Adder. Two modules required for 96 annunciation points.
- Additional outputs include connections for a MR-2300T remote trouble indicator, MR-2300-PR Reverse Polarity Module, an RS-485 bus for connection of up to seven RAX-LCD-LITE, RAM-3318-LCDs, MR-2312-SR12s or MR-2312-SW12s and RA-1000 Series annunciators.
- Auxiliary power is available in the form of 24V FWR unfiltered and unsupervised, 24VDC filtered and regulated, and resettable auxiliary power supply.


**Figure 1 Model MR-400 Single Loop (SLC) Fire Alarm Control Panel**

## 3.2 MR-400 System Components

The following table describes the components of the MR-400 Addressable Fire Alarm Control System.

**Table 1 MR-400 System Components**

| | Model | Description |
|---|---|---|
|  | **MR-400** | Model MR-400, black backbox, red door enclosure comes complete with main board, power supply, transformer and main display. |
| 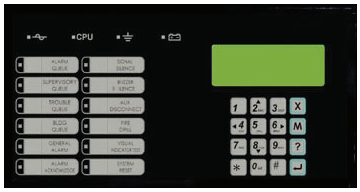 | **RAM-3318-LCD** | Remote Annunciator with 4-line LCD Display. |
| 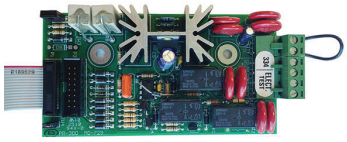 | **MR-2300-PR** | Polarity Reversal and City Tie Module. |
| 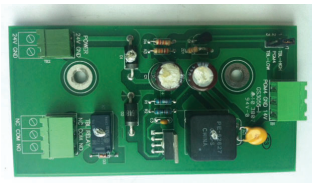 | **PCS-100** | Power Supply Interface Board use for powering SLE-LTEV, SLE-LTEA, 3G4010CF Universal Wireless Alarm Communicator. |
|  | **MR-2312-SW12** | Smart Relay Module with White Enclosure. Can support up to 12 relays. |

**Table 1 MR-400 System Components (Continued)**

| | Model | Description |
|---|---|---|
|  | **MR-2312-SR12** | Smart Relay Module with Red Enclosure. Can support up to 12 relays. |
| 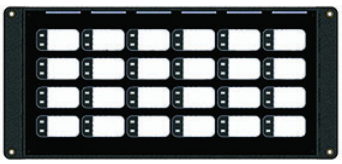 | **IPS-2424DS** | Programmable Input Switches Module with 24 switches. |
| 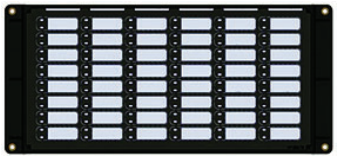 | **IPS-4848DS** | Programmable Input Switches Module with 48 switches. |
| 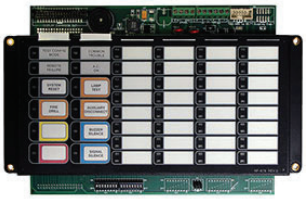 | **RAM-1032TZDS**<br>**RAM-1032TZDS-CC** | RAM-1032TZDS Main Chassis Remote Annunciator with 16 bi-coloured LEDs and 32 trouble LEDs.<br>RAM-1032TZDS-CC is the same as the RAM-1032TZDS, except it has conformal coating and is to be used in the MMX-BB-1001WPA/MMX-BB-1001WPRA weather protected box. |
| 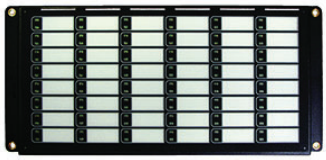 | **RAX-1048TZDS**<br>**RAX-1048TZDS-CC** | RAX-1048TZDS Adder Annunciator Chassis with 48 bi-coloured LEDs and 48 trouble LEDs.<br>RAX-1048TZDS-CC is the same as the RAX-1048TZDS, except it has conformal coating and is to be used in the MMX-BB-1002WPA/MMX-BB-1002WPRA weather protected box. |
| 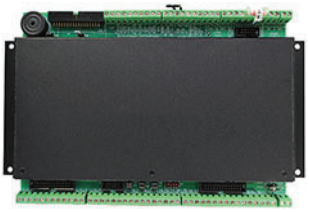 | **MGD-32** | Master Graphic Driver Module. |
| 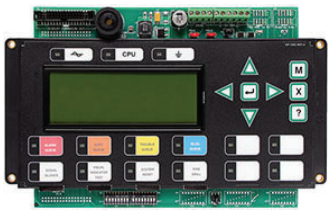 | **RAX-LCD-LITE** | Remote Annunciator with 4-line LCD Display. |

**Table 1 MR-400 System Components (Continued)**

| | Model | Description |
|---|---|---|
| 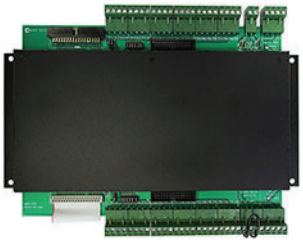 | **AGD-048** | Adder Graphic Driver Module. |
|  | **MR-2300T** | Common Remote Trouble Indicator, Buzzer and LED. |
|  | **MMX-BB-1001D** | White Enclosure for one annunciator. |
| | **MMX-BB-1001DR** | Red Enclosure for one annunciator. |
| | **MMX-BB-1001WPA** | White enclosure for one annunciator rated for outdoor environment, wet location. |
| | **MMX-BB-1001WPRA** | Red enclosure for one annunciator rated for outdoor environment, wet location. |
|  | **MMX-BB-1002D** | White Enclosure for two annunciators. |
| | **MMX-BB-1002DR** | Red Enclosure for two annunciators. |
| | **MMX-BB-1002WPA** | White enclosure for two annunciators rated for outdoor environment, wet location. |
| | **MMX-BB-1002WPRA** | Red enclosure for two annunciators rated for outdoor environment, wet location. |
|  | **MMX-BB-1003D** | White Enclosure for three annunciators. |
| | **MMX-BB-1003DR** | Red Enclosure for three annunciators. |

**Table 1 MR-400 System Components (Continued)**

| | Model | Description |
|---|---|---|
|  | **MP-300** | End of line resistor plate. 3K9. |

### 3.2.1 Devices

Refer to document LT-1023SEC for compatible devices.

# 4.0 Installation

This chapter describes the installation of the MR-400.

## 4.1 Mechanical Installation

The MR-400 is suitable for flush or surface mounting with a built-in trim ring.

| | |
|---|---|
| **Dimensions of Enclosure (minus built in trim ring)** | 14.5” x 4.25” x 21.14” |
| **Distance between horizontal mounting screws** | 12” |
| **Distance between vertical mounting screws** | 18.9” |
| **Complete Dimensions of Door** | 16.71” x 5.7” x 22.95” |

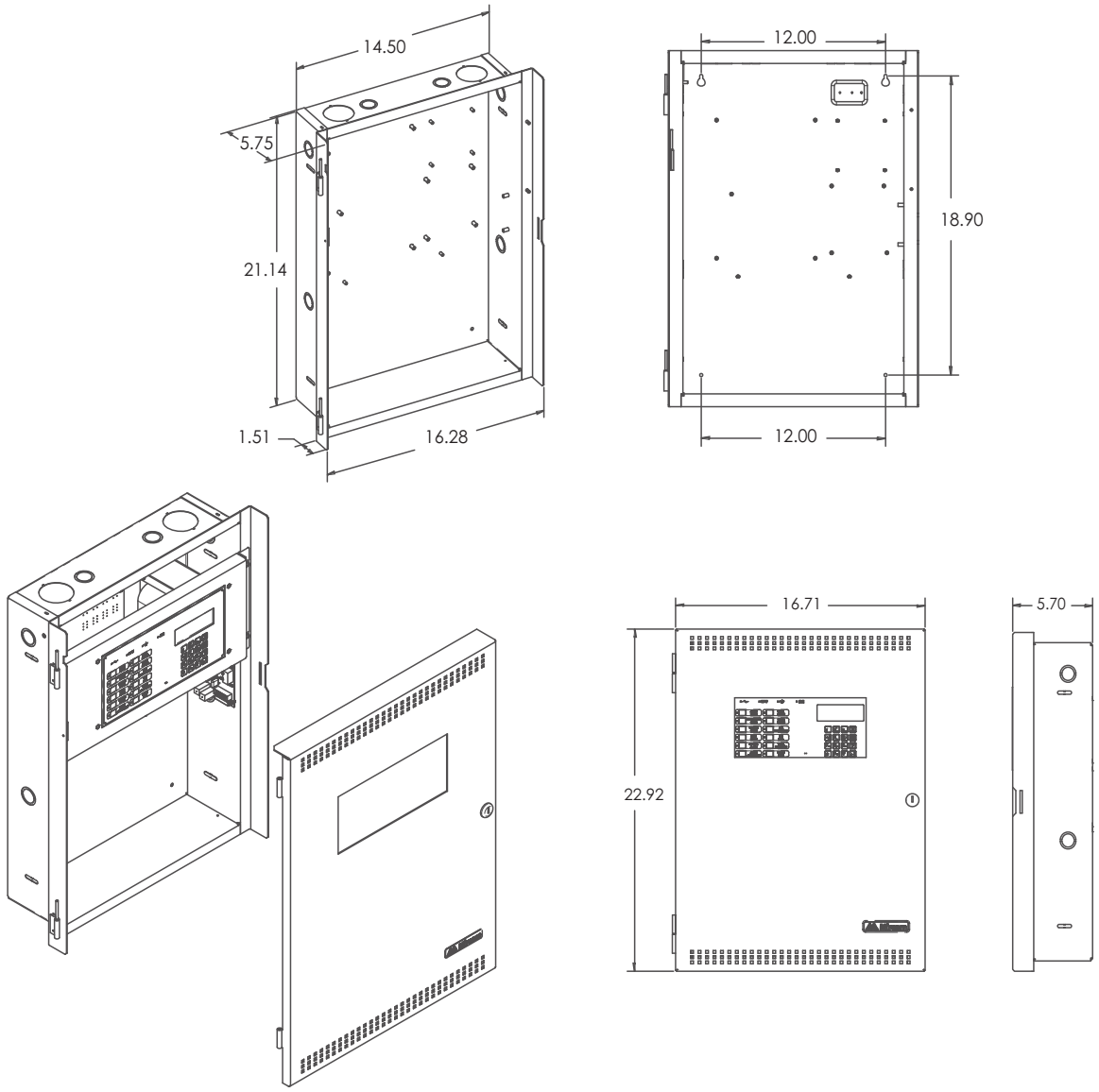


**Figure 2 MR-400 Mechanical Installation Instructions and Dimensions**

## 4.2 Installation Tips

1. Group the incoming wires through the top of the enclosure. For easy identification and neatness use a wire tie to group wires.
2. Be sure to connect a solid Earth Ground (from building system ground / to a cold water pipe) to the Chassis Earth Ground Mounting Lug, and to connect the Earth Ground Wire Lugs from the Main Chassis to the ground screw on the backbox.

**Attention: DO NOT install cable through bottom of the box. This space is reserved for Batteries.**

## 4.3 Connections and Jumpers

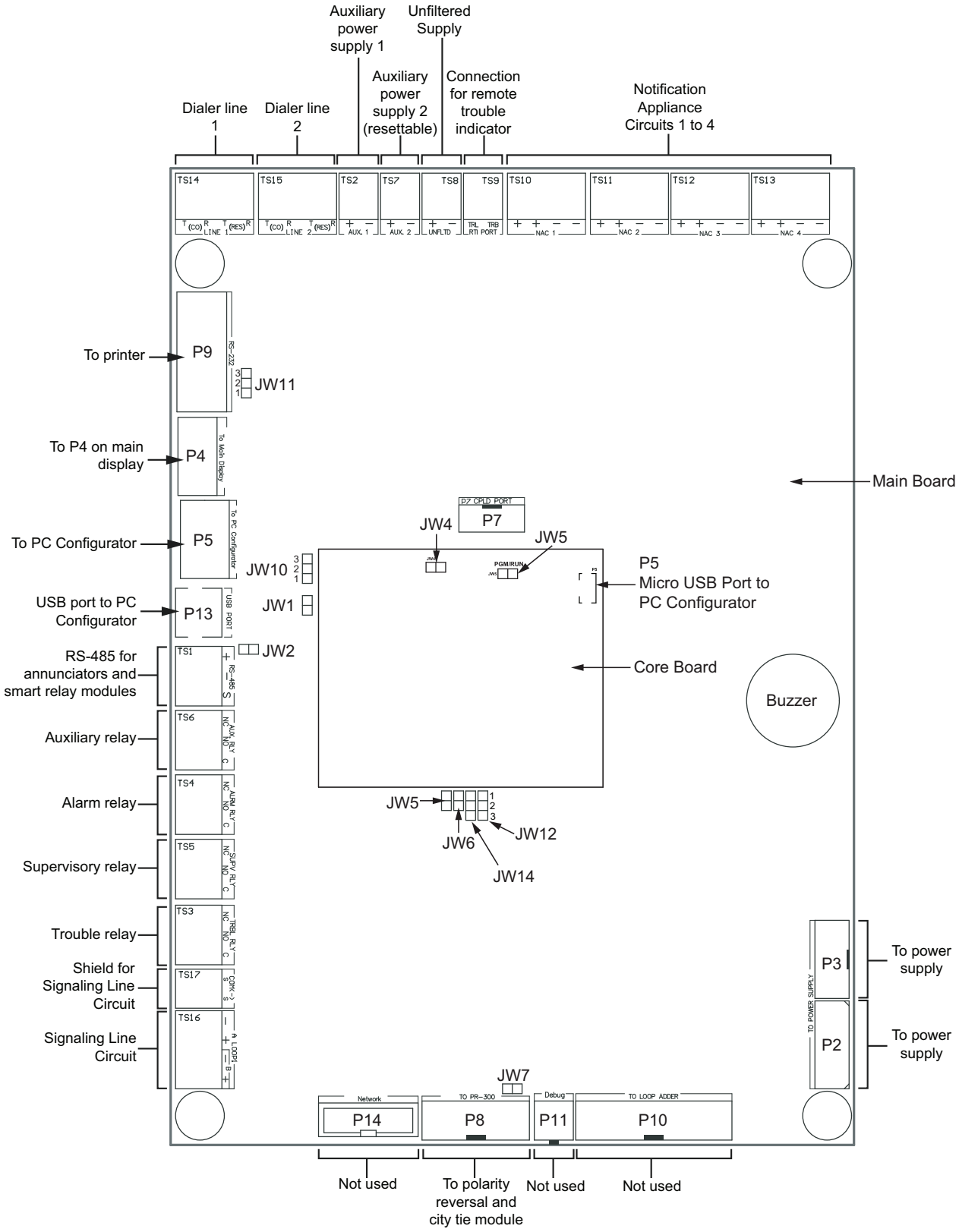


**Figure 3 Port and Jumper Locations on Main Board**

**Table 2 Main Board Connectors and Jumpers**

| Connector/ Jumper | Description |
|---|---|
| **TS1** | RS-485 for annunciators and MR-2312-SR12/MR-2312-SW12 |
| **TS2** | Auxiliary power supply 1, used to power the remote annunciators and smart relay modules (section 7.6.2) |
| **TS3** | Trouble relay |
| **TS4** | Alarm relay |
| **TS5** | Supervisory relay |
| **TS6** | Auxiliary relay |
| **TS7** | Auxiliary power supply 2 (resettable) (section 7.6.2) |
| **TS8** | Unfiltered supply (section 7.6.2) |
| **TS9** | Connection for MR-2300T (section 7.4.4) |
| **TS10-TS13** | Notification Appliance Circuits 1 to 4 (section 7.4) |
| **TS14** | Dialer line 1 (section 7.5) |
| **TS15** | Dialer line 2 (section 7.5) |
| **TS16** | Signaling Line Circuit (section 7.3) |
| **TS17** | Shield for Signaling Line Circuit (section 7.1.1) |
| **P2** | To P5 on power supply (section 7.6) |
| **P3** | To P6 on power supply (section 7.6) |
| **P4** | Ribbon cable connects to P4 on main display |
| **P5** | To PC Configurator |
| **P7** | Not used |
| **P8** | To MR-2300-PR |
| **P9** | To printer |
| **P10** | Not used |
| **P11** | Not used |
| **P13** | USB port to PC Configurator |
| **P14** | Not used |
| **JW1** | Must be on (closed) - allows configuration connection. The default setting is on. |
| **JW2** | Must be on (closed) - annunciator end of line. The default setting is on. |
| **JW5** | Normally off (open). Place jumper here and power down (AC and batteries) and power back to restore Master Passcode. After reset, remove jumper and leave open. The default setting is open. |
| **JW6** | Normally off (open) to BLOCK remote configuration with a modem. Place jumper here to ALLOW for remote configuration. When jumper is on (closed), panel will indicate a trouble. The default setting is open. |
| **JW7** | This jumper must be off (open) if a MR-2300-PR Polarity Reversal and City Tie Module is installed. The default setting is on (closed). |

**Table 2 Main Board Connectors and Jumpers (Continued)**

| Connector/ Jumper | Description |
|---|---|
| **JW10** | Must be in the 1-2 position (bottom 2 pins) - allows PC connection through serial port |
| **JW11** | Place in the 1-2 position (bottom 2 pins) for serial port or place in the 2-3 position (top 2 pins) for Keltron Dialer. |
| **JW12** | Close pins 2 and 3 to send the debug trace to the printer. Close pins 1 and 2 to send events to the printer. The printer is supervised when the pins are in position 2 and 3. The default setting is the 1-2 position. |
| **JW14** | Factory set on pins 2 and 3. Do not change. |

**Table 3 Core Board Connectors and Jumpers**

| Connector/ Jumper | Description |
|---|---|
| **P5** | Micro USB Port to PC Configurator. |
| **JW4** | Factory set on (closed). Leave as is. |
| **JW5** | Factory set off (open). Leave as is. |

**Attention: ADVANCED INSTALLER NOTE**

**Closing JW5 and JW6 on the main board at start-up will revert the panel to the default configuration.**

### 4.3.1 Jumper on Display

The jumper on the back of the display is factory installed on the middle 2 pins.

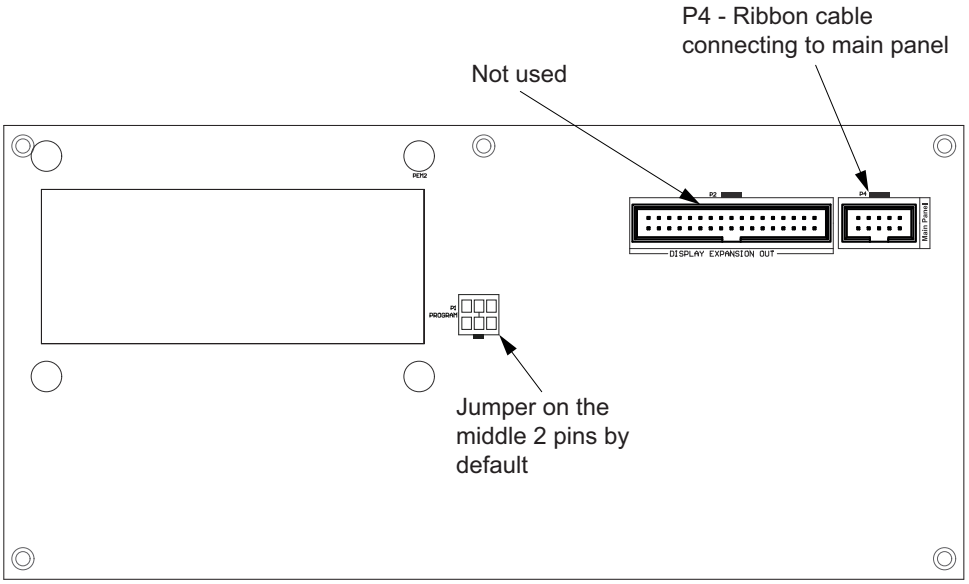


**Figure 4 Jumper on back of display**

## 4.4 Installing Adder Modules

The MR-400 Addressable Fire Alarm panel is shipped pre-assembled with all main components and boards.

The following items can be installed in the field:

- MR-2300-PR Polarity Reversal And City Tie Module
- PCS-100 Power Supply Interface Board
- RAX-1048TZDS Display Adder Module
- IPS-2424DS Programmable Input Switches Module
- IPS4848DS Programmable Input Switches Module

See the following diagrams for adder module installation locations. For Jumper or DIP Switch settings refer to Table 2 and for Wiring Specifications see section 7.1.

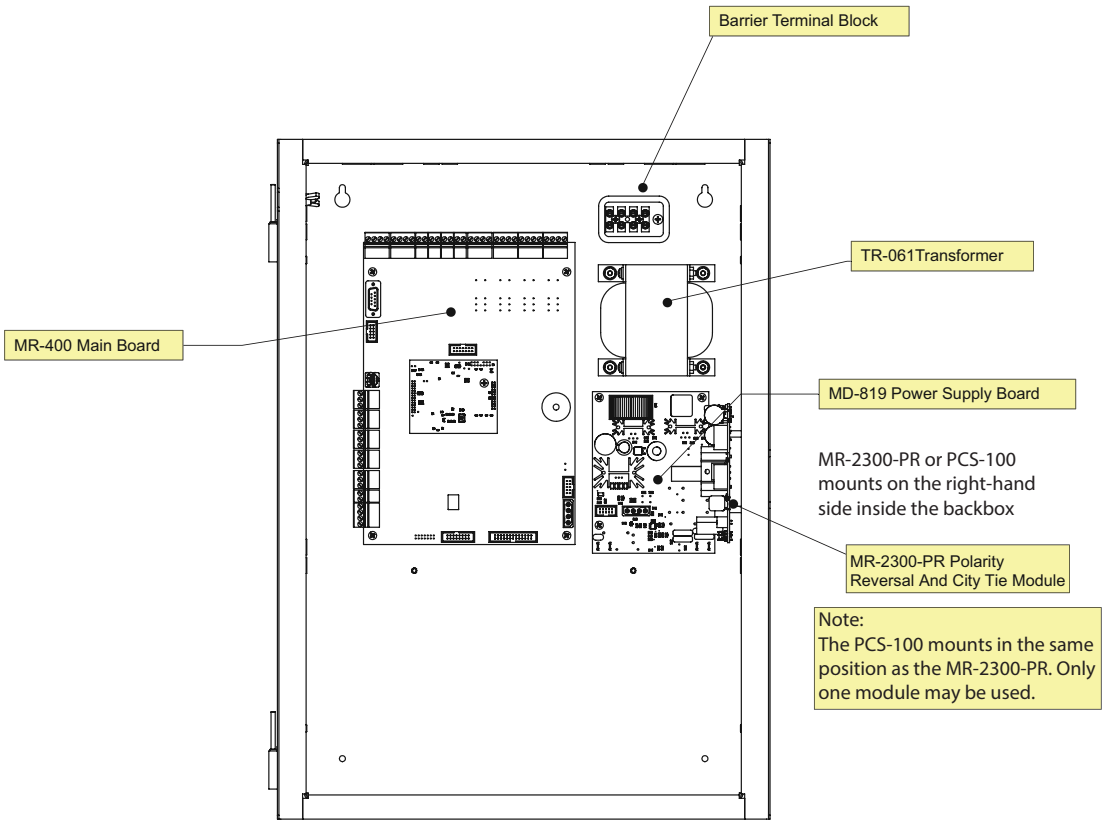


**Figure 5 Main Board with all Modules Installed**

### 4.4.1 Installing the MR-2300-PR Polarity Reversal and City Tie Module

Mount the MR-2300-PR as shown in Figure 6.

The Alarm Transmit signal to the MR-2300-PR can be programmed to turn OFF when signal silence is active. This allows the City Tie Box to be manually reset. On subsequent alarms the silenceable signals will resound and the City Tie Box will be retriggered.

The Trouble Transmit signal to the MR-2300-PR can be programmed to delay AC power fail 0, 1, 2, or 3 hours if this is the only system trouble.

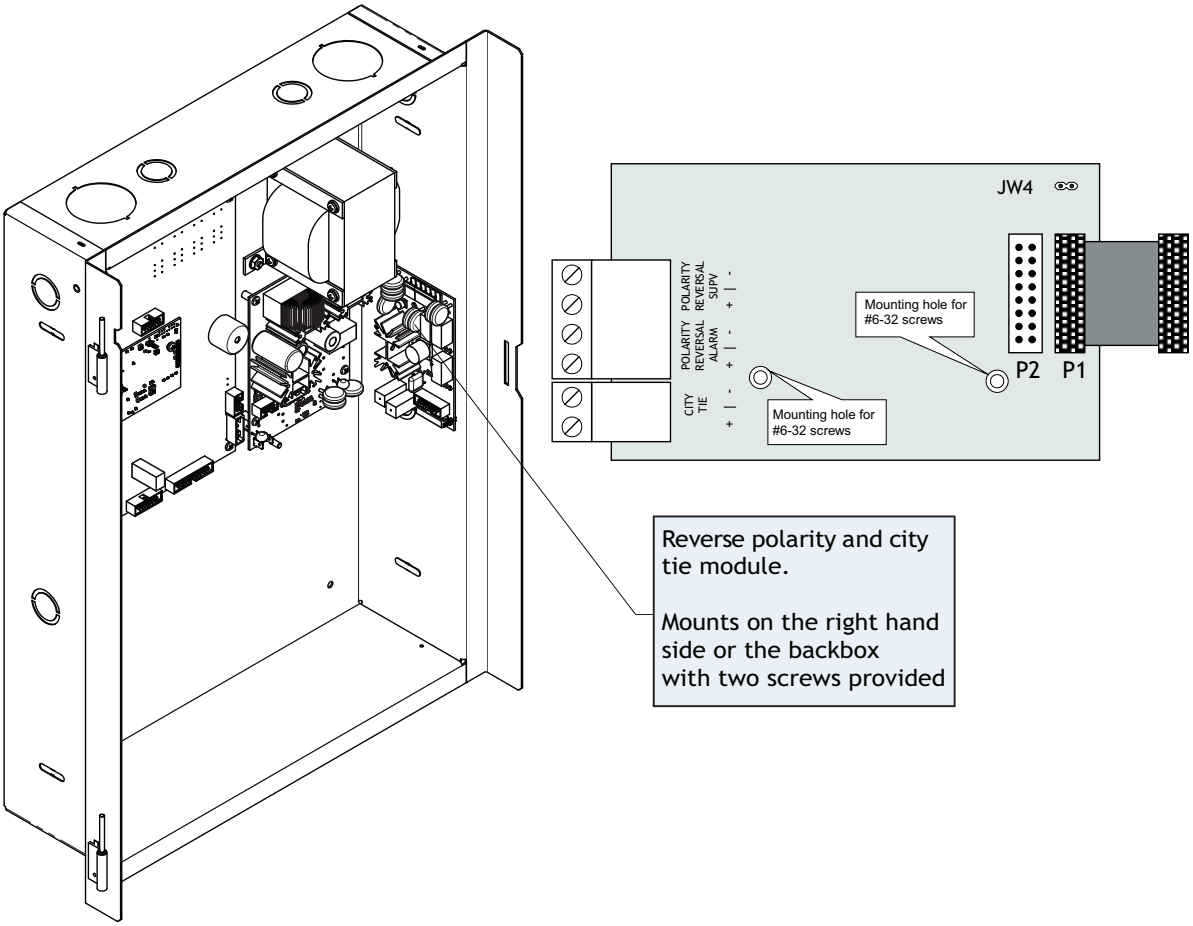


**Figure 6 Installing the MR-2300-PR Polarity Reversal and City Tie Module**

**Table 4 MR-2300-PR Polarity Reversal and City Tie Module Connectors and Jumpers**

| Item | Setting |
|---|---|
| **P1** | Connect cable to P8 on the Main Board of the MR-400 |
| **JW4** | Not used. Keep jumper intact. |

**Note:** If using a MR-2300-PR remember to remove JW7 on the main board. For the location of JW7 on the main board see Figure 3.

### 4.4.2 Installing the RAX-1048TZDS Display Adder Module

The MR-400 can have a maximum of two RAX-1048TZDS Display Adder Modules. The RAX-1048TZDS mounts in the MMX-BB-1000D series annunciator enclosures as part of the fire alarm system. No jumpers or other physical configuration steps are required to install the RAX-1048TZDS Display Adder Modules.

**To Install the RAX-1048TZDS Display Adder Module**

1. Mount the RAX-1048TZDS in the MMX-BB-1000D series enclosure and secure it with the hardware provided.
2. Disconnect main and standby power and connect the cable of the RAX-1048TZDS into the open header of the main annunciator.
3. If you are installing a second RAX-1048TZDS, connect the cable of the second RAX-1048TZDS into the open, remaining header of the existing RAX-1048TZDS. The additional LEDs will be available for configuration as LEDs 49 to 96, when the system power is restored.

### 4.4.3 Installing the IPS-2424DS Programmable Input Switches Module

The IPS-2424DS Programmable Input Switches Module mounts in the MMX-BB-1000D series annunciator enclosures as part of the fire alarm system. This adder module provides 24 programmable switches, 24 bi-coloured (red/amber) LEDs for fire alarm zone annunciation and 24 amber trouble LEDs.

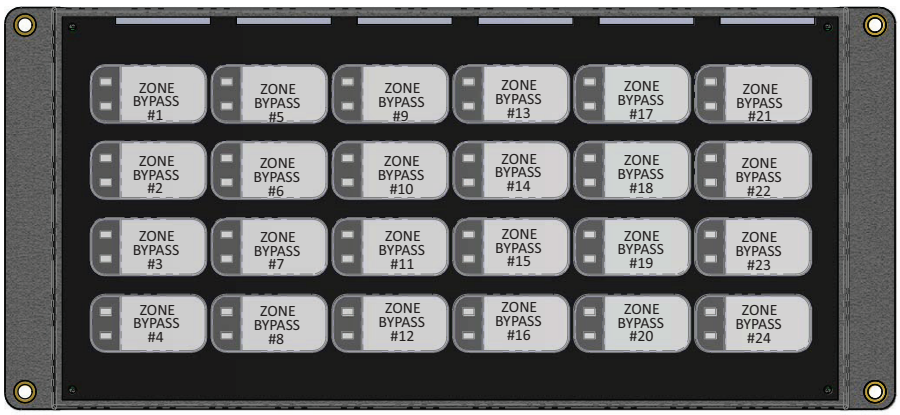


**Figure 7 IPS-2424DS Programmable Input Switches Module Front Chassis View**

### To Install the IPS-2424DS Programmable Input Switches Module

1. Mount the IPS-2424DS in the MMX-BB-1000D series enclosure and secure it with the hardware provided.
2. Disconnect main and standby power and connect the IPS-2424DS as shown in Figure 8.

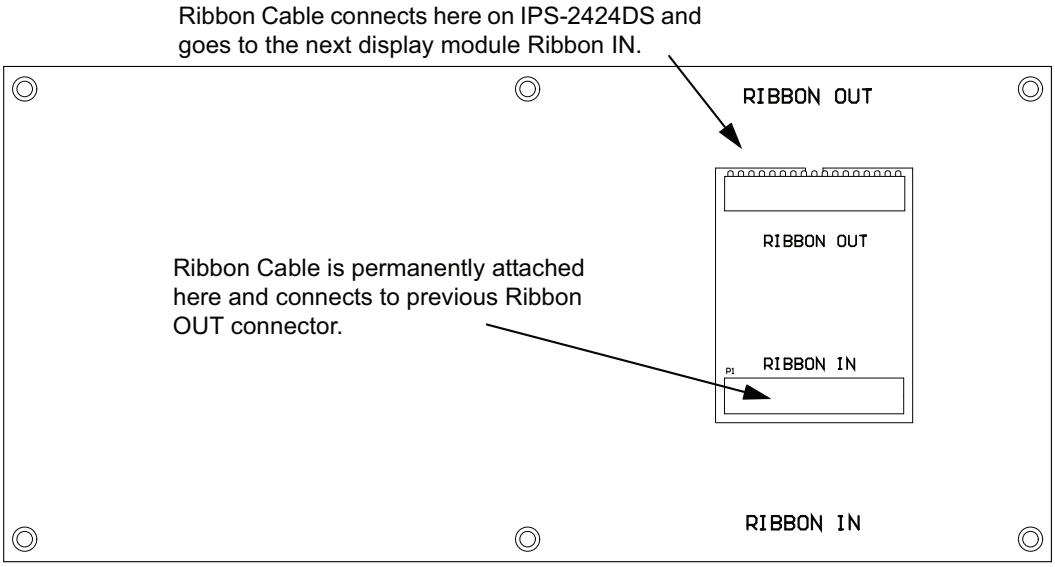


**Figure 8 IPS-2424DS Cable Connections**

### 4.4.4 Installing the IPS-4848DS Programmable Input Switches Module

The IPS-4848DS Programmable Input Switches Module mounts in the MMX-BB-1000D series annunciator enclosures as part of the fire alarm system. This adder module provides 48 programmable switches, 48 bi-coloured (red/amber) LEDs for fire alarm zone annunciation and 48 amber trouble LEDs.

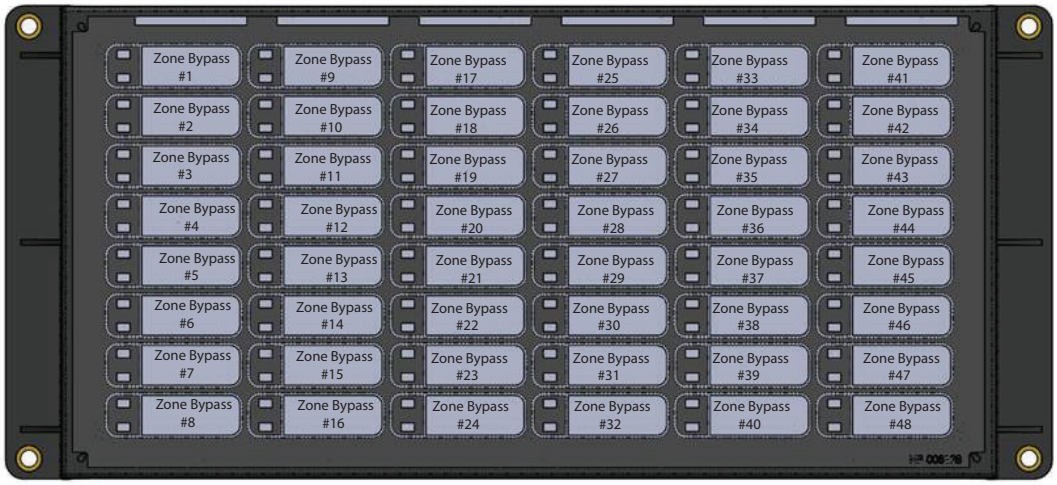


**Figure 9 IPS-4848DS Programmable Input Switches Module Front Chassis View**

**To Install the IPS-4848DS Programmable Input Switches Module**

1. Mount the IPS-2424DS in the MMX-BB-1000D series enclosure and secure it with the hardware provided.
2. Disconnect main and standby power and connect the IPS-4848DS as shown in Figure 10.

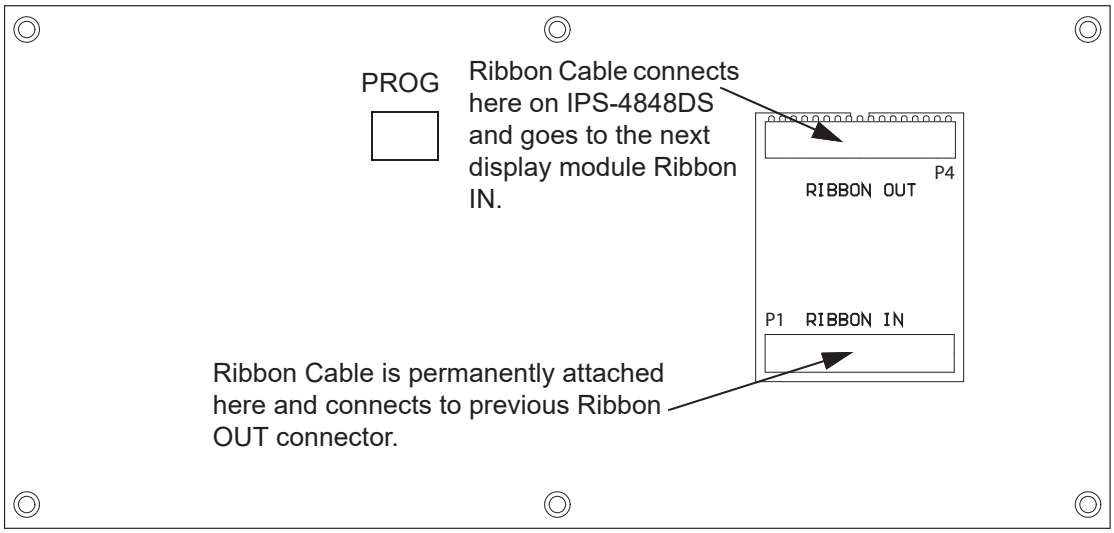


**Figure 10 IPS-4848DS Cable Connections**

## 4.5 Annunciators

Connect the annunciators to the RS-485 terminals and to auxiliary power. Use class B wiring for RS-485. For instructions, see the following Secutron documents:

- RAM-3318-LCD: LT-1093MOD
- RAM-1032TZDS(-CC) and RAX-1048TZDS(-CC): LT-617
- RAX-LCD-LITE: LT-1149
- MGD-32 and AGD-048: LT-847

## 4.6 MR-2312-SR12/MR-2312-SW12 Smart Relay Module

Connect MR-2312-SR12/MR-2312-SW12 to the RS-485 terminals and to auxiliary power. Use class B wiring for RS-485. For instructions, see LT-1001SEC.

## 4.7 MR-2300T Remote Trouble Indicator

Connect the MR-2300T to the port labeled **RTI Port**. For instructions, see LT-388SEC.

# 5.0 Operation

This chapter describes the operational capabilities of the MR-400.

**Table 5 Settings Permitted in UL864**

| NOTICE TO USERS, INSTALLERS, AUTHORITIES HAVING JURISDICTION, AND OTHER INVOLVED PARTIES | | | |
|---|---|---|---|
| This product incorporates field-programmable software. In order for the product to comply with the requirements in the Standard for Control Units and Accessories for Fire Alarm Systems, UL 864, certain programming features or options must be limited to specific values or not used at all as indicated below. | | | |
| Program feature or option | Permitted in UL 864? (Y/N) | Possible settings | Settings permitted in UL 864 |
| Two stage operation | N | Singe stage operation<br>Two stage operation | Singe stage operation |
| Building/Property Safety Input | N | Not Applicable | Not Applicable |
| | | | |

## 5.1 Addressable/Analog Devices

The MR-400 System provides one addressable loop (SLC) which can support 240 addressable devices.

Configuration is done via the MGC-400 software configurator.

**Additional Information**

- The addressable loop can be configured for Class A (Class X) or Class B operation.
- T-tapping is not recommended.
- Unshielded twisted pair (UTP) is recommended.
- A short or open on the loop will activate the common trouble sequence with a latching trouble. (Class A only)
- The maximum number of isolators is determined by the loop current.
- The MR-400 FACP will test the sensitivity of a single sensor address every 4 minutes. Each address will be tested once, approximately every 11 hours.

### 5.1.1 Supervision of Devices

The loop interface software continuously supervises the devices on its loop against those found during configuration for the following conditions:

- Device missing.
- Unconfigured device responding.
- Two or more devices responding to the same address.
- Wrong device type.

A communication or addressing error on a device is reported as a trouble on the associated zone LED as configured. The detectors may be configured as non-verified or verified alarm inputs.

### 5.1.2 Device LEDs

- Polling the devices on the loop causes the device LED to flash normally.
- All device LEDs can be suppressed via the configurator. **Suppressing the device LEDs causes sounder or relay bases to not operate.** For an unconfigured device, the LED will be steadily red. For a device with a built-in isolator, the LED will be steadily yellow if the isolator is activated.
- Activating devices on the loop (alarm for an input device, active for an output device) illuminates the device LED steady red.
- The maximum number of active Secutron (MRI-4000 series) addressable devices with their LED illuminated steady red is 40 for the SLC loop.

### 5.1.3 Alarm Conditions

Alarm conditions are determined by interrupt which uses thresholds for alarm conditions stored in the device.

Secutron addressable detectors (MRI-4000 series) send an interrupt request to the panel, indicating the Alarm condition. The system is polling the interrupt group to determine the devices in Alarm. The Alarm conditions are confirmed by device status flag and comparing reported value against the threshold.

Devices can be individually configured with 2 separate thresholds, “day time” and one “night time” or after hours operation; i.e. a device may be configured to a low sensitivity for “day time” and high sensitivity at “night time”. The day time threshold will be used unless the after hours operation is active. To configure threshold settings, Enable Auto After Hours must be selected in the configurator.

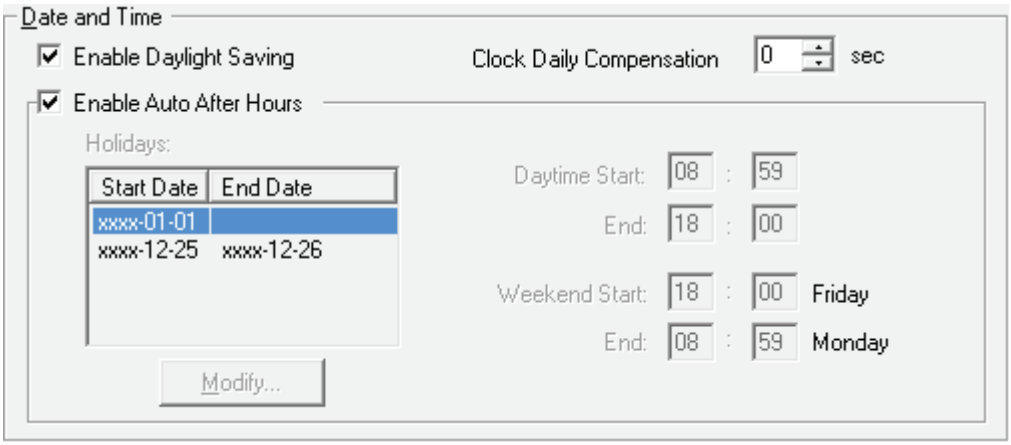


**Figure 11 MGC-400 Configurator Date and Time Settings**

The panel can provide up to 280mA of current to the devices on the loop at normal standby. For device currents see Appendix E - Battery Calculations.

For further information refer to the device Installation Instructions and other documentation provided with the addressable devices, bases, and isolators.

### 5.1.4 Drift Compensation

Drift Compensation is built into Secutron MRI-4000 series addressable devices, and is not performed by the panel. Drift Compensation automatically adjusts for gradually increasing effects of dust and other accumulations of dirt in the detectors. It will adjust the thresholds to compensate for a detector going dirty according to the gradual change in the normal clean air value received. When it can no longer compensate for an increasingly dirty detector, a dirty detector trouble is indicated for that device.

### 5.1.5 Auto Test

Periodically each detector is commanded to return an alarm value to test its ability to alarm. If the device fails the test, a trouble is indicated for that device. This trouble is latched until system reset.

## 5.2 Configurable Input Types

Input devices and modules may be configured as one of many possible input types. Table 6 identifies the device types assignable to each input type. For device type descriptions see sections 5.2.1 to 5.2.12.

**Table 6 Configurable Input Types**

| Input Type | As listed in Configurator | Description located in Section number | Device Types | |
|---|---|---|---|---|
| | | | Detectors | Dual Input Module<br>Mini Dual Input Module<br>Conventional Zone Module |
| **Alarm Input** | **Alarm Input** | 5.2.1 | **X** | **X** |
| **Latched Supervisory** | **Latched Supv** | 5.2.2 | **X** | **X** |
| **Non-Latching Supervisory** | **Non-Latch Supv** | 5.2.2 | **X** | **X** |
| **Building/Property Safety Input** | **Building** | 5.2.3 | **X** | **X** |
| **Priority Alarm** | **Priority Alm** | 5.2.4 | **X** | **X** |
| **Trouble Input** | **Trouble Input** | 5.2.5 | **X** | **X** |
| **Waterflow Alarm Input** | **Waterflow** | 5.2.6 | | **X** |
| **System Reset** | **Sys Reset** | 5.2.7 | | **X** |
| **Fire Drill** | **Fire Drill** | 5.2.7 | | **X** |
| **Acknowledge** | **Ack** | 5.2.7 | | **X** |
| **Total Evacuation** | **Total Evac** | 5.2.7 | | **X** |
| **Auxiliary Disconnect** | **Aux Disc** | 5.2.7 | | **X** |

**Table 6 Configurable Input Types (Continued)**

| Input Type | As listed in Configurator | Description located in Section number | Device Types | |
|---|---|---|---|---|
| | | | Detectors | Dual Input Module<br>Mini Dual Input Module<br>Conventional Zone Module |
| **Buzzer Silence** | **Buzz Sil** | 5.2.7 | | **X** |
| **Signal Silence** | **Signal Silence** | 5.2.7 | | **X** |
| **Acknowledge General Alarm** | **Ack GA** | 5.2.7 | | **X** |
| **Audible Walktest** | **Audible Walktest** | 5.2.8 | | **X** |
| **Silent Test** | **Silent Test** | 5.2.9 | | **X** |
| **Manual Day/Night** | **Manual Day/Night** | 5.2.10 | | **X** |
| **Auto Day/Night** | **Auto Day/Night** | 5.2.11 | | **X** |
| **Auxiliary Reset** | **Auxiliary Reset** | 5.2.7 | | **X** |
| **Verified Alarm** | **Verified Alm** | 5.2.12 | **X** | |

### 5.2.1 Alarm Input (Non-Verified)

An unbypassed, non-verified alarm input entering into alarm activates the common alarm sequence.

**Common Alarm Sequence**

- Updates unbypassed relay, signal, and strobe outputs based upon their configuration.
- Activates Alarm zone status indicators associated with the input.
- Alarm input activations display first and as the highest priority on the shared display in the common queue.
- Devices configured as alarm inputs display a pre-alarm condition on the shared display and on the alarm zone status indicator.
- Restoring the pre-alarm condition clears the status. If the input goes from pre-alarm to alarm, the pre-alarm status will be replaced with the alarm status for the input.
- Devices configured as alarm inputs display an alarm condition on the shared display and on the alarm zone status indicator.
- Once an alarm input is in alarm the alarm condition is latched until system reset (changes in status from alarm to pre-alarm or to normal are ignored).

### 5.2.2 Supervisory Inputs

Devices can be configured as latching or non-latching supervisory inputs. Any unbypassed supervisory input entering alarm activates the common supervisory sequence.

**Common Supervisory Sequence**

- Updates unbypassed relay, signal, and strobe outputs based upon their configuration.
- Activates Supervisory zone status indicators associated with the input.
- Supervisory input activations display as the second highest priority on the shared display in the common queue.
- Devices configured as supervisory inputs display as supervisory conditions on the shared display and on the supervisory zone status indicator.

- Restoring the non-latching supervisory input returns all outputs correlated to the input, that are not correlated to another active input, to normal.
- Zone display indicators update announcing the input is no longer active and removes the message from the shared display common queue.
- If there are no other active supervisory inputs the common supervisory condition will be restored.

Latched supervisory inputs operate the same as non-latched supervisory inputs with one exception:

- A normal to off-normal status change indication shall be latched and only manually resettable at the control unit or display and control centre.

### 5.2.3 Building/Property Safety Input

Building/Property Safety Inputs may include but are not limited to: fan status, dampers, motors, elevators, telephones, etc.

Building/Property Safety Inputs may be programmed to LED Indicators. The input status will activate the LED as configured.

- Building input activations display as the third highest priority on the shared display in the common queue. They are lower than supervisory and higher than troubles.
- May also be programmed to relay, signal, and strobe outputs.

**Caution:** **Correlating signal and strobe devices to building/property safety inputs requires the approval of the AHJ and are not to be used for fire events.**

- When an unbypassed building circuit activates, the status display and programmed outputs are activated.
- Restoring the building status returns all outputs correlated to the input, that are not correlated to another active input, to normal.

**Note:** Devices used for building inputs are to be isolated from fire operation. It is required that these devices are placed on a separate SLC loop if Class B wiring is used, otherwise wire the devices according to Class X to accomplish isolation.

### 5.2.4 Priority Alarm

Increases the polling frequency and optimizes the transmission of data from the device.

### 5.2.5 Trouble-Only Input

An active condition on an unbypassed trouble-only input initiates the common trouble sequence as a non-latching trouble.

- Activates Trouble zone status indicators associated with the input.
- Trouble input activations display as the lowest priority on the shared display in the common queue.

- May also be programmed to relay, signal, and strobe outputs.

**Note:** Trouble conditions initiated as a result of a trouble-only input activating is separate from the circuit or device supervision trouble.

### 5.2.6 Waterflow Alarm Input

Waterflow inputs are sampled every second. 10 samples in alarm in any given 15 second period confirms the alarm condition. Therefore from a continuous input activation the alarm will be processed within 10s.

#### LED Indication

The Alarm Zone LED indicator flashes when one sample indicates an alarm condition. If the alarm is confirmed the LED indicator will illuminate steady. If 15 seconds elapses without any samples in the alarm condition the LED Indicator will turn OFF. The waterflow retard operation operates regardless of whether or not the system is in alarm.

**Note:** Do not use the retard operation with any external retarding device.

### 5.2.7 System Status Correlations

The following System Status processes can be correlated to configured (mini) dual input modules:

- System Reset
- Fire Drill
- Acknowledge
- Total Evacuation
- Buzzer Silence
- Signal Silence
- Acknowledge General Alarm
- Auxiliary Disconnect

**Attention: Devices correlated with any of the above System Statuses need to be contained within a secured enclosure accessible only to those with the proper authority.**

### 5.2.8 Audible Walktest

Configures (mini) dual input modules as audible when conducting a walktest. For more information on performing a walktest see 5.10.5 Walk Test.

### 5.2.9 Silent Test

Configures (mini) dual input modules as silent when conducting a walktest. For more information on performing a walktest see 5.10.5 Walk Test.

### 5.2.10 Manual Day/Night

Configures (mini) dual input modules for manual day/night alarm thresholds. For more information on alarm thresholds see 5.1.3 Alarm Conditions.

### 5.2.11 Auto Day/Night

Configures (mini) dual input modules for auto day/night alarm thresholds. For more information on alarm thresholds see 5.1.3 Alarm Conditions.

### 5.2.12 Verified Alarm Input

Unbypassed verified alarm inputs entering into alarm are verified over a period of time to determine if the alarm condition is valid.

**Addressable / Analog Device Verification Process**

If the system is not already in alarm:

1. A device entering into alarm initiates a 30 second delay timer.
2. When the 30 second delay times out the device is monitored for the next 60 seconds.
3. If the same device enters into alarm again during this time the alarm is confirmed. The following will also confirm the alarm:
   - Any additional Alarm Input activating aborts the verification process and confirms the alarm.
   - Any trouble detected on the circuit being verified aborts the verification process and confirms the alarm.

**LED Indication**

The Alarm Zone LED indicator flashes for the duration of the verification process. If the alarm is not confirmed the LED turns off. If the alarm is confirmed the LED illuminates steady.

## 5.3 Output Types

Output devices and modules may be configured as one of many possible output types. Table 7 identifies the device types assignable to each output type. For device type descriptions see sections 5.3.1 to 5.3.3

Output modules on the addressable/analog loop may be configured as any of the following output types:

- Signals
- Strobes
- Relay outputs

**Table 7 Configurable Output Types**

| Output Type | As listed in Configurator | Description located in Section number | Device Types | |
|---|---|---|---|---|
| | | | Dual Relay Module | Supervised Output Module |
| **Relay** | **Relay** | 5.3.3 | **X** | **X** |
| **Signal** | **Signal** | 5.3.1 | **X** | **X** |
| **Strobe** | **Strobe** | 5.3.2 | **X** | **X** |

**Additional Operation Features**

- The panel can synchronize strobes directly without the use of the synchronous module.
- Depending on the device, the system can detect open and short troubles and report it as an output circuit trouble.

### 5.3.1 Signal Output

For audible devices such as bells and piezo mini-horns, signals operate in alert (two stage) and/or evacuation rate.

### 5.3.2 Strobe Type Settings

**Normal (non-synchronized)**

- Strobe circuits operate similar to signals except that they are always turned ON continuously (they are not affected by the alert or evacuation rates) if configured as Normal.
- Configuring strobes as Normal does not use a sync protocol for the output circuit.
- Silenceable or non-silenceable.

**Synchronized**

Output circuits can be configured with various synchronization protocols.

When the output circuit is configured as strobe and also configured as non-silenceable and the device used on the output is a combination of horn and strobe, then if the signal silence is activated while the circuit is active the horn(s) are silenced while the strobe keeps on flashing.

Synchronized strobes and strobe/horn models of the following manufacturers are supported: Mircom, System Sensor, Wheelock and Gentex.

**Note:** Silencing of the horn depends on the feature provided by the manufacturer of the horn/strobe combination. Some models of the horn/strobe combination may not have this feature and will not work as described above.

### 5.3.3 Relay Output

Unbypassed relay outputs are activated if any unbypassed input circuit or common system status which has been programmed to it is active. If the relay is configured as silenceable it is inhibited when common auxiliary disconnect is active. Relays also turn off if they are bypassed or if all inputs and system statuses correlated to the Relay Output are restored or bypassed.

## 5.4 NAC Circuit Operation

NAC Circuits can be configured as

- Signal Output
- Strobe Output
- Relay Output

For more information on Outputs see 5.3 Output Types.

Powered output circuits are supervised while they are not active for both open circuits and shorts.

The circuit will not be activated if there is a short trouble on the circuit. It will be activated if an open trouble is indicated. A circuit trouble activates the common trouble sequence as a non-

latching trouble. Since open circuit supervision does not operate while the circuit is in alarm, if the circuit was in trouble before it was activated, it will still indicate trouble while active. The trouble condition will be re-evaluated when supervision resumes.

Output circuits configured as strobes can have sync protocol for synchronization if configured. Certain strobe and strobe/horns models of the following brands are supported:

- Mircom
- System Sensor
- Wheelock
- Gentex

When configured as normal, the output circuit is ON continuously when activated and does not use any sync protocol. When configured as non-silenceable strobes, the strobes cannot be silenced, but the horn can be silenced by pressing the 'signal silence' button.

If the strobe is configured as silenceable strobe both the horn and the strobe are silenced (stopped) by pressing the 'signal silence' button.

## 5.5 Single Stage Operation

In a single stage system, all alarm inputs are treated in a similar manner. Alarm inputs include any of the following:

- Non-verified alarm
- Verified alarm
- Waterflow alarm
- Sprinkler alarm

Any of the above alarm inputs activating when the panel is not already in alarm cause the following:

- The buzzer sounds steady.
- Cancels active fire drill.
- Common Alarm LED turns ON.
- Common Alarm relay activates if Aux disconnect is not active.
- The Auto Signal Silence timer activates (if configured).
- The Signal Silence Inhibit timer activates (if configured).
- If Aux disconnect is not active, activates all non-disconnected indicating circuits programmed to the input.
- Activates non-disconnected strobes associated with the input.
- Activates non-disconnected signals associated with the input at the evacuation rate.

Subsequent alarms when the panel is already in alarm, cause the following:

- The alert buzzer sounds steady.
- Resounds silenced signals, turns off the Signal Silence LED, and restarts the Auto Signal Silence timer (if configured).
- Activates continuously any additional non-disconnected strobes associated with the input.
- Activates at the evacuation rate any additional non-disconnected signals associated with the new input.

## 5.6 Evacuation Codes

The following Evacuation codes can be configured for the MR-400 FACP.

| | |
|---|---|
| **Continuous** | On 100% of the time. |
| **Temporal Code** | 0.5 second on and 0.5 second off repeated 3 times 1.5s pause |
| **March Code** | 0.5 second on 0.5 second off. |
| **California Code** | 5 seconds on 10 seconds off. |

## 5.7 Positive Alarm Sequence

In a Positive Alarm Sequence (PAS) system, only smoke detectors can be dedicated as PAS inputs. PAS Inputs can only be from the following process types:

- Non-verified alarm
- Verified alarm

Any of these alarm inputs activating when the panel is not already in alarm causes the following:

- Buzzer sounds steady.
- Cancels active fire drill.
- Common Alarm LED turns ON.
- Individual zone LED (if programmed) turns ON.
- Common Alarm relay does not activate.
- PAS timer starts for 15 seconds.
- All outputs programmed to the input are not activated.

When the PAS alarm has been acknowledged by pressing the Alarm Cancel button within 15 seconds, the following sequence occurs:

- Buzzer silences
- Common Alarm LED remains ON.
- Individual zone LED (if programmed) remains ON.
- PAS timer starts for 180 seconds (3 minutes). This is the time allotted to reset the system and avoid any true alarm sequence.

When the PAS alarm has been acknowledged within the given time limits and the system resets, the following occurs:

- The buzzer remains silenced.
- Common Alarm LED turns OFF.
- Individual zone LED (if programmed) turns OFF.
- Cancels the alarm event with no log reference.
- Fire alarm system returns to normal.

If at any time during the Positive Alarm Sequence a second alarm (PAS or otherwise) is actuated or the given time limits expire, the fire alarm will go into evacuation mode and the following occurs:

- Common Alarm relay activates if Aux disconnect is not active.
- The Auto Signal Silence timer activates (if configured).
- The Signal Silence Inhibit timer activates (if configured).

- If Aux disconnect is not active, activates all non-disconnected indicating circuits programmed to the input.
- Activates non-disconnected strobes associated with the input.
- Activates non-disconnected signals associated with the input at the evacuation rate.

In a preconfigured FACP the Positive Alarm Sequence may be enabled or disabled as the user requires. For more information on enabling or disabling the Positive Alarm Sequence see 5.7.1 Enabling or Disabling the Positive Alarm Sequence.

### 5.7.1 Enabling or Disabling the Positive Alarm Sequence

Enabling or Disabling the Positive Alarm Sequence is done using the numeric keypad. For more information on how to use the Numeric Keypad see 6.2.1 Numeric Keypad and Cursor Buttons on page 56.

**How to enable or disable the Positive Alarm Sequence**

1. From the Keypad of the FACP press **M** to enter the **Menu**.
2. Using the **Up and Down** cursor buttons, scroll to **Operation**.
3. Press **Enter.**
4. In the **Operation Menu** scroll to **Positive Alarm**.
5. Press **Enter**.
6. You will now see the current status of the **Positive Alarm Sequence** and will be prompted to change status.

```
Pos Alarm disabled
Enable? Y
```

**Figure 12 Enabling the Positive Alarm Sequence**

7. To change the status press **Enter**.

**Note:** Positive Alarm Sequence needs to be configured in the configuration job file before it is sent to the panel. There will be no notification message advising a change of status.

8. To exit without changing the status press **Cancel**.

**How to enable the Positive Alarm Sequence in the MGC-400 Configurator**

1. In the Job Details window, check the **Positive Alarm Sequence** box.

   This option only applies to alarm input devices with the PA flag (F2) set.

## 5.8 Remote Annunciator Operation

The MR-400 System supports the following types of annunciators.

- RAX-LCD-LITE shared display annunciator.
- RAM-3318-LCD shared display annunciator.
- Conventional LED/switch annunciators.

Both shared display RAX-LCD-LITE and RAM-3318-LCD annunciators are connected to the panel via the RS-485 serial link (Class B).

The maximum number of annunciators is seven (7). Configuration of the annunciators is done via the MGC-400 software configurator.

Ensure that the address DIP switch on each annunciator is set to the same value set in the configurator. Only the first three (3) DIP switches are used for address configuration.

**Table 8 Annunciator Address DIP Switch Settings**

| Address | SW1-1 | SW1-2 | SW1-3 |
|---|---|---|---|
| **1** | ON | OFF | OFF |
| **2** | OFF | ON | OFF |
| **3** | ON | ON | OFF |
| **4** | OFF | OFF | ON |
| **5** | ON | OFF | ON |
| **6** | OFF | ON | ON |
| **7** | ON | ON | ON |

### 5.8.1 Supervision of annunciators

- The communications with each annunciator is constantly supervised by the panel and the annunciator.
- If communications fails, the panel will activate the common trouble sequence. The number of annunciators is set during panel configuration.
- If there is a mismatch in the total number of annunciators the panel will generate communications trouble.
- The panel trouble is non-latching: when the correct number of annunciators is detected the troubles will clear.

### 5.8.2 RAX-LCD-LITE Shared Display Annunciator

- The RAX-LCD-LITE is equipped with a large 4 line x 20 character backlit alphanumeric LCD display which uses a simple menu system complete with a directional key pad and switches for Enter, Menu, Cancel and Info.
- Contains a local alert buzzer.
- Under normal operation the alert buzzer is controlled by the system and operates in an identical manner as the one in the main panel.
- If communication fails the buzzer is processed locally.

### 5.8.3 RAM-3318-LCD Shared Display Annunciator

- The RAM-3318-LCD operates identically to the main LCD FACP display.
- Contains a local alert buzzer.
- Under normal operation the alert buzzer is controlled by the system and operates in an identical manner as the one in the main panel.
- If communication fails the buzzer is processed locally.

### 5.8.4 Conventional Annunciators

The MR-400 System is designed to interface with the RA-1000 series of conventional LED annunciators. The LEDs may be configured to zone status indicators. Each conventional annunciator contains a local alert buzzer. Under normal operation the alert buzzer is controlled by the system and operates in an identical manner as the one in the main panel. If communication fails it is processed locally.

### 5.8.5 MR-2312-SR12/MR-2312-SW12 Smart Relay Module

- Connects on the RS-485 loop along with other remote annunciators.
- Provides 12 relay contact outputs which actuate according to the first 12 remote LED groups.
- Relays are bypassed by Auxiliary Bypass
- Supervised as one of the (maximum) seven permitted annunciators.

## 5.9 Dialer Operation

The MR-400 is equipped with a built-in dialer. The dialer provides a means to communicate panel status to the remote central monitoring station using two dedicated phone lines. The two standard protocols for communicating with the central monitoring station are supported by this panel are as follows.

- SIA Format Protocol
- SIA Contact ID

**Attention: As per UL864 R10 section 41.3.2.13 the dialer is not to call a number that is call forwarded.**

**The automatic telephone line test and trouble report must be sent to the same supervising station.**

### 5.9.1 Event Reporting

Events are reported in a special format depending upon the protocol selected. For a complete description of the reporting codes see Appendix C - Reporting.

### 5.9.2 Telephone line supervision

See section 7.5.1 for the wiring diagram. The phone lines are supervised for the presence of:

- DC voltage.
- Dial tone, stuttered dial tone and message waiting tone.

Supervision is carried out every two minutes as follows:

1. DC voltage is supervised and if it is detected the dial tone is monitored.
2. If the phone lines are equipped with a house phone with proper connection and is in use the DC voltage supervision is suspended until the house phone is ON-HOOK again.

However, the system then does off-hook current monitoring supervision to ensure that the phone line is operational.

3. If there is an event to be reported in the dialer queue and the house phone is in use the dialer tries the second line to report the event.
4. If that line's house phone is also in use the dialer seizes the line. The dialer disconnects the house phone and reports the event to the central monitoring station.

## 5.10 Using the Operation Menu from the Control Panel

Operations of the MR-400 Addressable Fire Alarm Control Panel can be managed via the Operation Menu on the LCD Shared Display. Accessing the menus is done via the Numeric Keypad and Cursor Buttons. For a complete description of how to use the Numeric Keypad and Cursor Buttons see section 6.2.1 Numeric Keypad and Cursor Buttons on page 56.

The following items can be accessed through the Operation Menu:

- Setting the Time on the system
- Setting the Passcode on the system
- Viewing Reports
- Clearing Logs
- Walk Test Function
- Bypass Operation
- Disconnecting Auxiliary Relays
- Testing the Dialer
- After Hours Operation
- Clearing Verification Counts
- Ground Fault Testing - Factory Use Only

Complete configuration of the system is done via the MGC-400 software configurator.

**Note:** See section 6.2.1 for instructions on using the numeric keypad to navigate the menus.

**How to Enter the Operation Menu**

1. Press the **Menu** button.
2. Use the **DOWN** Cursor key to scroll to **3. Operation** and press the **Enter** button to enter the Operation Menu.

```
Operations
 1 Set Time
 2 Set Password
 3 Reports
 4 Clear logs
 5 Walk test
 6 Bypass
 7 Aux. disc.
 8 Test UDACT
 9 After hours
 10 Clear ver.cnts
 11 Gnd.Fault test
 12 Positive alarm
 13 Exit
```

**Figure 13 Operation Menu**

3. To select an Operation use the **DOWN** Cursor key to scroll to desired choice and press the **Enter** button.

### 5.10.1 Setting the Time

```
Date: Oct 08, 2022
 Time: 10:00 PM
```

Sets the current date and time for the panel. Use the '#' key to move the cursor forward and the UP and DOWN key to change the date/time parameters.

### 5.10.2 Setting the Passcode

By default, no passcode is required to press the control buttons and enter the operation menu.

This feature sets the passcode for all three access levels. The minimum number of digits for a passcode is 4. For changing a specific level of passcode the passcode required is the equivalent level or higher level.

You are prompted to enter the access level for which the passcode needs to be changed.

```
Access level: 1
```

You are then prompted to enter the current access level or higher level passcode. The maximum number of digits allowed is ten (10).

```
Enter passcode
_____________
```

If an incorrect passcode is entered an invalid passcode message displays on the shared LCD. You have three attempts to enter the correct passcode. After three failed attempts the display reverts back to the main operation menu.

```
Invalid passcode
```

If the passcode is correct, enter the new passcode and press the **Enter** button.

```
Enter new passcode
```

To confirm the passcode, re-enter the passcode and press the **Enter** button.

```
Re-enter passcode
```

### 5.10.3 Reports

**Overview**

Reports can be generated in command mode from the reports menu. Reports can be displayed in a special format on the shared display for the following items:

```
Report Menu
 1 Alarm Log
 2 Event Log
 3 Current Levels
 4 Verif Counts
 5 Maint report
 6 M/P Report
```

For each report, the system asks you to select an output.

```
- Report To -
 1 Printer
 2 Screen
```

If you select “Printer”, then the system asks you to select the address range, if relevant. “All” selects all addresses from all configured loops and “Loop” selects addresses from one loop.

```
 1 All
 2 Loop
```

If you select “Loop”, then enter a loop number.

```
Loop Number
Loop: _
```

If the panel does not have a printer connected or if you selected “Screen” under the “Report To” menu, only one address appears. Enter this address.

```
Device address
Loop: _ Addr:
```

**1. Alarm log**

The alarm log report displays the contents of the alarm event log on the shared display which contains the last 400 of any of the following events:

- Activation of any alarm input or common control which activates the common alarm sequence.
- Activation of system reset.
- Clearing of the event log (as the first entry).

Each entry contains the time and date of the event and a description of what the event was, for example:

```
Event 001 of 002
System Reset
activated
Sep 15, 2022 02:18PM
```

For input circuits the first line shows the programmed message, the second line shows the status of the circuit and the position of the event in the queue along with the total number of events in the queue.

Other events are displayed in the same format with information applicable to that event only.

**2. Event logs**

The general event log report displays the contents of the general event log on the shared display which contains the last 400 of any of the following events:

- Activations of any input circuits.
- Restoral of non-latching input circuits.
- Pre-alarm on any device.
- Initiation of the alarm verification sequence on a verified alarm input.
- Any system troubles.
- Activation of any system common control or any command on the command menu.

The report format is similar to the alarm log report. Pressing the **INFO** key shows additional information about the log.

**3. Current levels**

The current levels report displays real-time device information for all eligible devices on the target loop or for all eligible devices on all loops if you specify a target loop or select all. Eligible devices are those present in the configuration and also those detected as present on the SLC addressable loop. You can indicate the device address to start with, but only if you indicated the loop number as 1, 2, or 3.

Device information consists of the percent of alarm if the device is an input.

The display shows the loop number, device address, the device type, device status, and the level of alarm, in the following format:

```
Loop 1 Address 2
0001 000 0096 0032
(0% alarm)
```

1. Press the **Up** and **Down** cursor keys to scroll through all the devices on the loop.
2. Press the **Info** Button to see more information about the selected device.

```
(MIX4) Photo Det
Threshold: 192
```

**4. Verify counts**

The verification count report displays the number of times that the alarm verification cycle has been initiated without causing an alarm for all verified devices or circuits on the specified loop or loops. If the count is zero, the device is not displayed.

The report shows the loop number, device address and verify count in the following format:

```
Loop 2 Address 232
Verification
count: 000
```

Press the **Up** and **Down** cursor keys to scroll through all the devices on the loop for which the verify count is available. If there are no verified devices on the loop the following message appears.

```
No verified devices
found
```

Verification counters are cleared by the “Clear Verification Count” command and at initial power-up.

**5. Maintenance report**

The maintenance report displays all smoke sensors on the specified loop or loops detected as dirty (% alarm > 75). The percent of alarm rises as the detector gets dirty. A trouble occurs once the percentage reaches 75%. The report shows the device address, percentage dirty, device type, and programmed message:

The maintenance report is shown in the following format.

```
Maint Report
Percent dirty :012%
```

Press the **Up** and **Down** cursor keys to scroll through all the devices on the loop for which the maintenance report is available. If there are no dirty devices on the loop the following message appears.

```
No dirty devices
found
```

**6. M/P Report**

The Secutron Protocol (MP) Report will display all local parameters of an Secutron Protocol device currently connected on the SLC. This feature will list the internal register values of current Secutron Protocol devices. Use this tool to report information to Secutron technical support.

The report lists all the parameters of all the addresses related to the selected device. “Crt.” indicates report line number, “Add” indicates device current address, “Parm#” indicates the parameter number from the current address, and “Val#” indicates the parameter value.

```
Crt  Add  Parm#  Val
1    000  01     002
2    000  02     034
3    000  02     003
```

### 5.10.4 Clear Logs

This feature the logs stored in the flash memory.

Press the **Up** and **Down** cursor keys to the desired log to be cleared and press the **Enter** button.

```
Select Log
 1 Alarm Log
 2 General Log
 3 All Logs
```

A message prompts for confirmation.

```
Are you sure you
want to clear all
the entries in the
selected log(s)? Y
```

After confirmation the logs are cleared and the following information message appears.

```
Log(s) cleared
```

### 5.10.5 Walk Test

This feature initiates a silent or audible walk test. The following occurs when in walk test mode:

- Generates a non-latching trouble that clears after exiting the walktest.
- Cancelling the walk test is done by pressing the **Cancel** button or if no circuit activations are detected for one hour.
- Zone indicators, including the Smart Relay Module (MR-2312-SR12) function normally during the test, displaying the input status when it is activated.

- Other Relays and signal correlations to input circuits are not processed during walk-test. Correlations to system status will still be processed.
- All common controls and keys not explicitly required for the walk-test operation are disabled while the walk-test is active.
- The alarm verification and waterflow retard operations are disabled on inputs during walk-test.

During an audible walk test:

- Activating any input activates all signals for half a second.
- Trouble on any input activates all signals continuously for 5 seconds. After the code is transmitted, the input resets (if resettable) and is tested again. If it is still in alarm or trouble the code will be re-transmitted.

Use the **UP** and **DOWN** cursor keys to scroll to the desired option press the **Enter** button.

```
Select Test Type
 1 Audible Test
 2 Silent Test
```

The following message shows the walk test initializing.

```
Initializing
Walk test...
```

While the walk test is active, the following message appears:

```
- Walktest Active -
Alarms: nnn
Troubles: mmm
Press ENTER to end
```

The numbers “nnn” and “mmm” are continuously updated counts of the number of alarms and troubles which have been recorded during the test (alarms includes all input circuit types tested).

**Selective Output Testing**

The walk test can be operated with only a selection (up to 64) of outputs. To do this, select audible test.

```
Select all NACs for
the walk test? Y
```

Select “No” by using the right arrow key and the next screen will say:

```
NACs selected
None
```

Use the left and right arrow key to move through the outputs you want to active during walk test.

**Note:** Each event during the walk test is also recorded in the log. Therefore, any event past the 200 count will clear the log and be entered as event 1 and so on.

**Walk Test Report**

When you stop the walk test, the system asks you to select an output for the report.

```
- Report To -
 1 Printer
 2 Screen
```

If you select “Screen”, then the walk test report appears.

```
Walktst 1 of 2
Sep 21, 2022 04:14PM
Walktest
in progress
```

Press **UP** or **DOWN** to see the other pages of the walk test report.

## 5.10.6 Bypass

The bypass operation has the following options:

```
 - Bypass Menu -
 1 Device/ Circuit
 2 Group
 3 Loop
 4 List Bypass
 5 List Un-Bypass
```

**1. Device/Circuit**

Individual circuit can be bypassed using this option. The system asks for the device’s loop number and the device address to be bypassed.

```
Device Address
Loop: _ Addr:
```

If the device is not bypassed, you are prompted to bypass the circuit.

```
FLOOR 4 ALARM

L1- 0022 not
bypassed. Bypass? Y
```

After the confirmation, the device is bypassed and the message appears that the device is bypassed.

```
Device/circuit
bypassed.
```

If the device is already bypassed, the system prompts you to unbypass the circuit.

```
FLOOR 4 ALARM

L1- 0022 now
bypassed. Unbypass?
```

After the confirmation, the device is unbypassed and the information message shows that the device is unbypassed.

```
Device/circuit
unbypassed.
```

**2. Groups**

Configured bypass groups can be bypassed using this option. The list of all the configured bypass groups is displayed and you can select which group to bypass.

```
Bypass groups
 1 Bypass Floor A
 2 Bypass Floor B
 3 Bypass Floor C
```

Scroll up or down to select a group and press **Enter**. If the selected group is not bypassed, the system prompts you to bypass the group.

```
Group not bypassed.
Bypass? Y
```

After the confirmation the group is bypassed and the message appears saying that the group is bypassed.

```
Group bypassed.
```

If the group is already bypassed, the system prompts you to unbypass the group.

```
Group now bypassed.
Unbypass? Y
```

After the confirmation, the group is unbypassed and the message says that the group is unbypassed.

```
Group unbypassed.
```

**3. Loop**

The whole loop either conventional or addressable can be bypassed using this option. Enter the loop number to be bypassed.

```
Loop number
Loop: _
```

If the loop is not already bypassed, the system prompts you to bypass the loop.

```
Loop 1 currently
not bypassed

Bypass? Y
```

After the confirmation, the loop is bypassed and a bypass confirmation message appears.

```
Loop bypassed.
```

If the loop is already bypassed, the system prompts you to unbypass the loop.

```
Loop 1 currently
bypassed

Unbypass? Y
```

After the confirmation the loop is unbypassed and an unbypass confirmation message appears.

```
Loop unbypassed.
```

**4. List Bypass**

A list of devices may be bypassed using this option. The system prompts you to enter the loop number associated with these devices.

```
Loop number
Loop: _
```

Next, enter the address list of devices you wish to bypass. Use the following symbols to enter the address list:

**Table 9 List Bypass Special Characters**

| Symbol | Number of times to press “1” key | Description |
|---|---|---|
| - | 2 | Sets the interval of consecutive addresses, e.g. 1-7. |
| , | 3 | Separates the addresses of the devices |
| ! | 4 | Placed at the end of list to signify that no individual confirmation is required. |

```
Enter bypass list...
_
```

The following message appears if the current address carries no device.

```
Lp:x Addr:xx
Invalid address
```

The system prompts you to bypass the device.

```
FLOOR 4 ALARM

xxxx not
bypassed. Bypass? Y
```

If the device is already bypassed the message is as follows.

```
FLOOR 4 ALARM

xxxx
Already bypassed...
```

If the exclamation mark is not used, then there will be individual confirmation.

```
Device/circuit
unbypassed.
```

At the end of the bypass operation or if the exclamation is used, the message shows:

```
Done...
```

**5. List Unbypass**

A list of devices can be bypassed using this option. The system prompts you to enter the loop number to be unbypassed.

```
Loop number
Loop: _
```

Enter the list to unbypass. The last list bypassed will be displayed.

```
Enter bypass list...
_
```

If the list to be unbypassed is shown, press **Enter** to complete the unbypassing. Otherwise, you may unbypass the devices one, two or more at a time.

```
FLOOR 4 ALARM

xxxx now
bypassed.Unbypass? Y
```

If you are attempting to unbypass items that are already unbypassed you will see an “Already unbypassed” message.

```
FLOOR 4 ALARM

xxxx
Already unbypassed...
```

Otherwise, if the exclamation mark is not used, then there will be individual confirmation.

```
Device/circuit
unbypassed.
```

At the end of the unbypass operation or if the exclamation mark is used, the message shows:

```
Done...
```

## 5.10.7 Auxiliary Disconnect

The auxiliary disconnect operation is performed by following the steps below. If the auxiliary relays are connected, you are prompted to disconnect the relays.

```
Common aux relays
currently connected.

Disconnect? Y
```

After the confirmation the auxiliary relays are disconnected and the information message is displayed that the auxiliary relays are disconnected.

```
Relays disconnected.
```

If the auxiliary relays are already disconnected, you are prompted to reconnect the relays.

```
Common aux relays
now disconnected.

Reconnect? Y
```

After the confirmation the auxiliary relays are reconnected and the information message is displayed that the auxiliary relays are reconnected.

```
Relays reconnected.
```

### 5.10.8 Test UDACT

This feature lets you test the dialer operation. You can manually test both the phone line L1 and L2 and also reset the dialer where all the events to be reported in the queue are cleared and the dialer status is reset.

```
UDACT test
 1 L#1 Manualtest
 2 L#2 Manualtest
 3 Reset UDACT
```

### 5.10.9 After Hours

This feature lets you manually set the day time or the night time mode of operation thus overriding the current daytime or nighttime mode. The system asks for confirmation as shown below.

```
Day/night mode set
to manual daytime
operation
Change? Y
```

Enter which mode to be set.

```
Select mode
 1 Daytime
 2 Nighttime
```

A message appears showing that the day/night mode is updated.

```
Day/Night mode
updated.
```

### 5.10.10 Clear Verify Count

This operation is used to clear all the verification counts accumulated during the alarm verification process. The system asks for confirmation as shown below.

```
Clear all
verification
counters? Y
```

A message appears saying that the counts are cleared.

```
Counters cleared.
```

### 5.10.11 Ground Fault Test - Factory Use Only

This feature displays the system ground fault, positive and negative. When ground fault test is selected, your passcode will be requested. An example of a ground fault test result is shown below.

```
Pos.Gnd: 0.349v
Neg Gnd: 17.101v
```

### 5.10.12 Positive Alarm Sequence

If this feature is enabled the system allows for Positive Alarm Sequence (PAS) alarm signals from automatic fire detection devices. This selection is mutually exclusive with Two Stage Operation; that is, you can have one or the other and not both. Any devices deemed PAS will activate the common alarm LED, the individual LED (if programmed), flash the Acknowledge LED and sound the alarm buzzer at the panel. The LCD display will also declare the PAS alarm. There will be no alarm signalling initially. All evacuation signal and off-premises signalling will be activated if the Acknowledge button is not pressed within 15 seconds of the PAS alarm and the RESET button is not pressed within 180 seconds from the acknowledge, or if a second device goes into alarm.

Selecting this menu item will have one of three outcomes:

An error message when the feature is not configured:

```
Enable Pos Alarm
option first!
```

An option to enable when the feature is available but has been bypassed:

```
Pos Alarm disabled
Enable? Y
```

An option to disable when the feature is available and enabled:

```
Pos Alarm enabled
Disable? Y
```

### 5.10.13 Set Key Access

This feature is not used.

### 5.10.14 Exit

This feature exits to the main command menu.

# 6.0 Indication & Controls

This chapter describes the LED indicators and controls of the MR-400.

## 6.1 Indication and Controls

MR-400 Display Panel is equipped with the following:

- 12 Control buttons with associated LEDs
- 16 button Numeric Keypad with Cursor buttons

Figure 14 below shows the LED indicators and control buttons on the MR-400 front display.

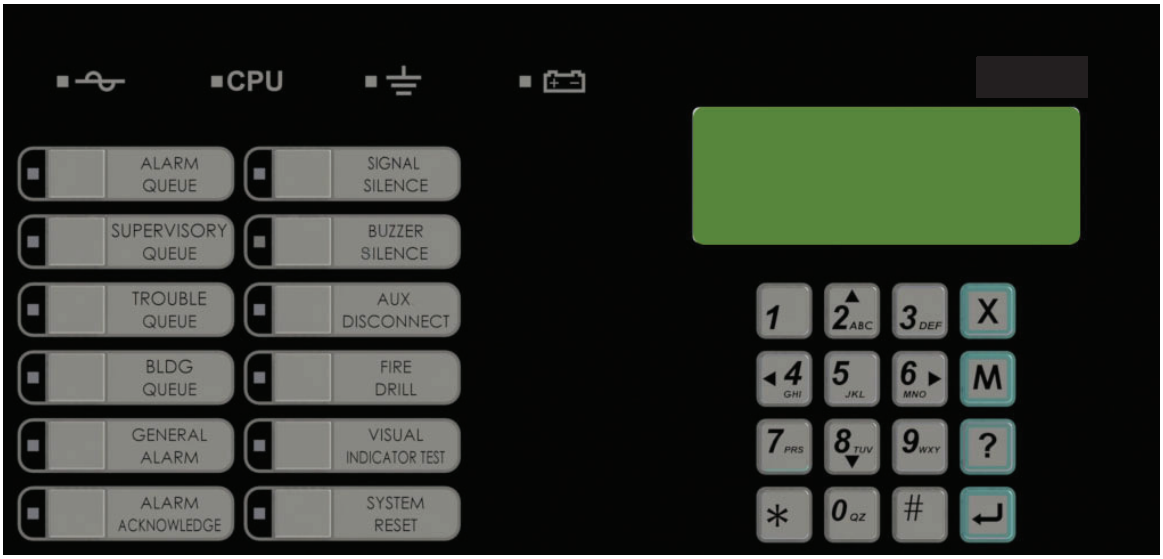


**Figure 14 LED Indicators and Control Buttons**

## 6.2 LCD Display

The display is a four line, 80 character back-lit alphanumeric LCD. It displays information regarding the panel, its circuits, and devices. An on-screen cursor is controlled by the cursor buttons for menu selection and control. Report information provided by the LCD display includes:

- Alarm Log
- Event Log
- Current Levels
- Device Information
- Verification and Maintenance Reports

Use the cursor buttons on the Numeric Keypad for menu selection and control. For more information see 6.2.1 Numeric Keypad and Cursor Buttons section below.

### 6.2.1 Numeric Keypad and Cursor Buttons


**Figure 15 Numeric Keypad**

**Table 10 Numeric Keypad and Cursor Buttons**

| Key | Description |
|---|---|
| 2 ABC | **Key 2 (Up Cursor)**<br>Press this button to move the cursor or scroll up lists in a continuous loop. |
| 4 GHI | **Key 4 (Left Cursor)**<br>Press this button to add or remove the X from an option in the Configuration menu. See Appendix B - Manual Panel Configuration. |
| 6 MNO | **Key 6 (Right Cursor)**<br>Press this button to add or remove the X from an option in the Configuration menu. See Appendix B - Manual Panel Configuration. |
| 8 TUV | **Key 8 (Down Cursor)**<br>Press this button to move the cursor or scroll down lists in a continuous loop. |
| * | **Star Button**<br>Press this button to move the cursor to the left or select options to the left. |
| # | **Pound Button**<br>Press this button to move the cursor to the right or select options to the right. |
| X | **Cancel Button**<br>Press this button to cancel an operation or exit a menu. |
| M | **Menu Button**<br>Press this button to view the command menu. |
| ? | **Info Button**<br>Press this button for detailed information about a displayed item. |
| ↵ | **Enter Button**<br>Press this button to select a displayed item. |

## 6.3 Common LED Indicators and Control Buttons

For complete descriptions of all LED indicators and control buttons see the following table.

**Table 11 LED Indicators and Control Buttons**

| LED Indicator and Control Buttons | Description |
|---|---|
|  | **AC On Indicator**<br>Illuminates steady green when the main AC power is within acceptable levels. The LED turns off when the level falls below the power-fail threshold and the panel is switched to standby (battery) power. |
|  | **Ground Fault Indicator**<br>Flashes yellow at the Trouble rate when a Ground Fault is detected on any field wiring. Clearing the Ground Fault clears the indication and turns the LED off. |
|  | **CPU Fault Indicator**<br>Flashes yellow at the Trouble rate when the processor ceases functioning. |
|  | **Battery/Charger Trouble**<br>Flashes yellow at the Slow Flash rate. Clearing the trouble condition clears the indication and turns the LED off. |
|  | **Alarm Queue Button and Indicator**<br>Flashes red when there is an alarm in queue. The buzzer sounds steady.<br>An alarm can be generated in two ways:<br>• When any Alarm configured point or input activates.<br>• Pressing the General Alarm button to activate the panel alarm.<br>Pressing the Alarm Queue button allows the user to cycle through and review a list of active alarms from oldest to most recent. Once all alarms in the queue have been reviewed the LED will illuminate steady. Resetting the panel clears the indication and turns the LED off. |
|  | **Supervisory Queue Button and Indicator**<br>Flashes yellow at the Fast Flash Rate when a Latching or Non-Latching circuit is activated. The buzzer sounds at the fast rate.<br>Pressing the Supervisory Queue button allows the user to cycle through and review a list of active supervisory alarms from oldest to most recent. Once all alarms in the queue have been reviewed the LED will illuminate steady.<br>If all Non-Latching Supervisory circuits are restored and there are no Latching Supervisory Circuits active, the indication will clear and the LED will turn off.<br>Resetting the panel will clear the activation of any Latching Supervisory Alarms, clears the indication and turns the LED off. |

**Table 11 LED Indicators and Control Buttons (Continued)**

| LED Indicator and Control Buttons | Description |
|---|---|
|  | **Trouble Queue Button and Indicator**<br>Flashes yellow when any trouble condition is detected on the panel. The buzzer sounds at the slow rate.<br>Pressing the Trouble Queue button allows the user to cycle through and review a list of active Troubles from oldest to most recent. Once all troubles in the queue have been reviewed the LED will illuminate steady.<br>Clearing all Trouble conditions clears the indication and turns the LED off. |
|  | **Building Queue Button and Indicator**<br>Flashes yellow at the Trouble Flash rate when any Building condition is detected on the panel. The buzzer sounds at the fast rate.<br>Pressing the Building Queue button allows the user to cycle through and review a list of active Building Conditions from oldest to most recent. Once all conditions in the queue have been reviewed the LED will illuminate steady.<br>Clearing all Building conditions clears the indication and turns the LED off. |
|  | **System Reset Button and Indicator**<br>The System Reset button resets the Fire Alarm Control Panel and all Circuits.<br>Pressing the System Reset button causes a trouble to occur and the LED to illuminate steady yellow. The following events will occur<br>• Resets all Latching, Trouble Conditions.<br>• Resets all Initiating Circuits.<br>• Resets 4-Wire Smoke Supply and Aux. Power Supply.<br>• Turns off all Indicating Circuits.<br>• Turns off Signal Silence, Ack & GA Indicators.<br>• Turns off Fire Drill.<br>• Stops and resets all Timers.<br>• Processes inputs as new events.<br>• Aux Disconnect is not affected.<br>• Reset cannot be activated until the Signal Silence Inhibit timer has expired.<br>Resetting the System clears the indication and turns the LED off. |
|  | **Alarm Acknowledge Button and Indicator - Positive Alarm Sequence**<br>LED and Indicator are active only when the Panel is configured for PAS. Flashes yellow at the Fast Flash Rate as the Auto General Alarm Timer is timing.<br>If the panel is configured for Positive Alarm Sequence (PAS), activation of the Acknowledge button within 15 seconds of a PAS alarm will delay a common alarm activation for 180 seconds.<br>The expiring of the Auto General Alarm Timer causes the Panel to enter General Alarm, clears the indication and turns the LED off. |

**Table 11 LED Indicators and Control Buttons (Continued)**

| LED Indicator and Control Buttons | Description |
|---|---|
|  | **General Alarm Button and Indicator**<br>When pressed, this button will activate the panel into evacuation. The LED indicator will turn steadily red. |
|  | **Signal Silence Button and Indicator**<br>Flashes yellow at the Trouble Flash rate when Indication Circuits are silenced by the following:<br>• Pressing the Signal Silence button.<br>• The Auto Signal Silence Timer.<br>Any Subsequent Alarms cause the Signals to resound, clears the indication and turns the LED off.<br>Pressing the Signal Silence button when the Panel is in Alarm turns on the Signal Silence Indicator and deactivates any Silenceable Indicating Circuits. Non-Silenceable Circuits are unaffected. Signals will re-sound upon any subsequent Alarm.<br>This button does not function during the following:<br>• Any configured Signal Silence Inhibit Timer period.<br>• If Fire Drill has activated the Indicating Circuits. |
|  | **Buzzer Silence Button and Indicator**<br>Flashes yellow at the Trouble Flash rate when the Buzzer Silence button is pressed. Any new alarm, supervisory or trouble events resounds the buzzer and will cause the Buzzer Silence LED to turn off. |
|  | **Auxiliary Disconnect Button and Indicator**<br>Activating the Auxiliary Disconnect button activates the Auxiliary Disconnect function. The Auxiliary Alarm Relay is always disconnected with this button. The Common Alarm Relay, the Common Supervisory relay and all correlated alarm relays may be disconnected as selected through configuration. Activating the Auxiliary Disconnect button also causes the Common Trouble LED to illuminate steady, the common trouble relay to send a trouble message and the trouble buzzer to flash at the trouble flash rate. Pressing the Auxiliary Disconnect button again de-activates this function and the system will go back to normal. |
|  | **Visual Indicator Test Button and Indicator**<br>Pressing the Visual Indicator Test button illuminates all front panel LEDs on steady in the appropriate color and turns the buzzer on steady. If Visual Indicator Test is active for more than 10 seconds, Common Trouble is activated. |

**Table 11 LED Indicators and Control Buttons (Continued)**

| LED Indicator and Control Buttons | Description |
|---|---|
|   | **Fire Drill Button and Indicator**<br>Illuminates steady yellow during an active Fire Drill.<br>Pressing the Fire Drill button activates all programmed and non-Disconnected Indicating Circuits. It does not transmit any Alarms via the City Tie, or Common Alarm Relay.<br>Fire Drill may be programmed to operate specific NAC Circuits. Fire Drill is cancelled by pressing the button again (toggle switch), or if the Panel goes into a real Alarm. |

### 6.3.1 Flash Rates

**Fast Flash**

120 flashes per minute, 50% duty cycle.

**Trouble Flash**

20 flashes per minute, 50% duty cycle.

# 7.0 Wiring

This chapter describes the proper field wiring for the MR-400.

## 7.1 Wiring Tables

### 7.1.1 Addressable Loop Wiring Maximums

**Secutron (MRI-4000 series) Addressable Devices**

- Maximum Loop Current = 350 mA
- Maximum Loop Resistance = 40 ohms
- Maximum Loop Capacitance = 0.5 µF
- Inductance shall not exceed 1 mH

**Shield for Analog Loop Wiring:** Only twisted pair is recommended, but if shielded twisted pair is used, wire shield at the start and the end of the loop to the terminals marked **S** on the main board.

**Table 12 Secutron (MRI-4000 series) Devices Addressable Loop Wiring Table**

| Wire Gauge | Maximum Wiring Run to Last Device | |
|---|---|---|
| (AWG) | ft | m |
| 12 | 10,000 | 3049 |
| 14 | 7971 | 2429 |
| 16 | 4980 | 1518 |
| 18 | 3132 | 955 |

### 7.1.2 RS-485 Wiring to Annunciators and other Devices

- Use twisted shielded pair
- 22 AWG maximum of 2000 feet
- 20 AWG maximum of 4000 feet

### 7.1.3 NAC and Auxiliary Power Supply Circuits

**Table 13 NAC and Auxiliary Power Circuits Wiring Table**

| TOTAL SIGNAL LOAD | MAXIMUM WIRING RUN TO LAST DEVICE (ELR) | | | | | | | | MAX. LOOP RESISTANCE |
|---|---|---|---|---|---|---|---|---|---|
| | 18AWG | | 16AWG | | 14AWG | | 12AWG | | |
| Amperes | ft | m | ft | m | ft | m | ft | m | Ohms |
| 0.06 | 2350 | 716 | 3750 | 1143 | 6000 | 1829 | 8500 | 2591 | 30 |
| 0.12 | 1180 | 360 | 1850 | 567 | 3000 | 915 | 4250 | 1296 | 15 |
| 0.30 | 470 | 143 | 750 | 229 | 1200 | 366 | 1900 | 579 | 6 |
| 0.60 | 235 | 71 | 375 | 114 | 600 | 183 | 850 | 259 | 3 |
| 0.90 | 156 | 47 | 250 | 76 | 400 | 122 | 570 | 174 | 2 |
| 1.20 | 118 | 36 | 185 | 56 | 300 | 91 | 425 | 129 | 1.5 |
| 1.50 | 94 | 29 | 150 | 46 | 240 | 73 | 343 | 105 | 1.2 |

**Notes:** Main Board NAC Circuits are rated for of 1.5 Amperes each.

Maximum Voltage Drop Should Not Exceed 1.67 Volts

### 7.1.4 Input Circuits

If using conventional detectors with an MR-400 FACP, MRI-4042 conventional zone modules must be used. Refer to document LT-1023SEC for compatible devices.

**Table 14 Conventional Zone Module Input Circuit Wiring Table**

| Wire Gauge | Maximum Wiring Run to Last Device and Back (ELR) | |
|---|---|---|
| (AWG) | ft | m |
| 18 | 3787 | 1154 |
| 16 | 5952 | 1814 |
| 14 | 9615 | 2930 |

**Notes:** Maximum Loop Resistance Should Not Exceed 25 Ohms.

Maximum Wiring Run indicates wiring distance out and back to the panel. The resistance across the shorted wire should be less than 25 Ohms.

## 7.2 Wire Routing

**Notes:** All external connections are power limited except for the AC connections to the transformer. Transformer connections must be routed separately from all other external connections using their own conduit.

All power limited wiring shall be routed through remaining knockouts.

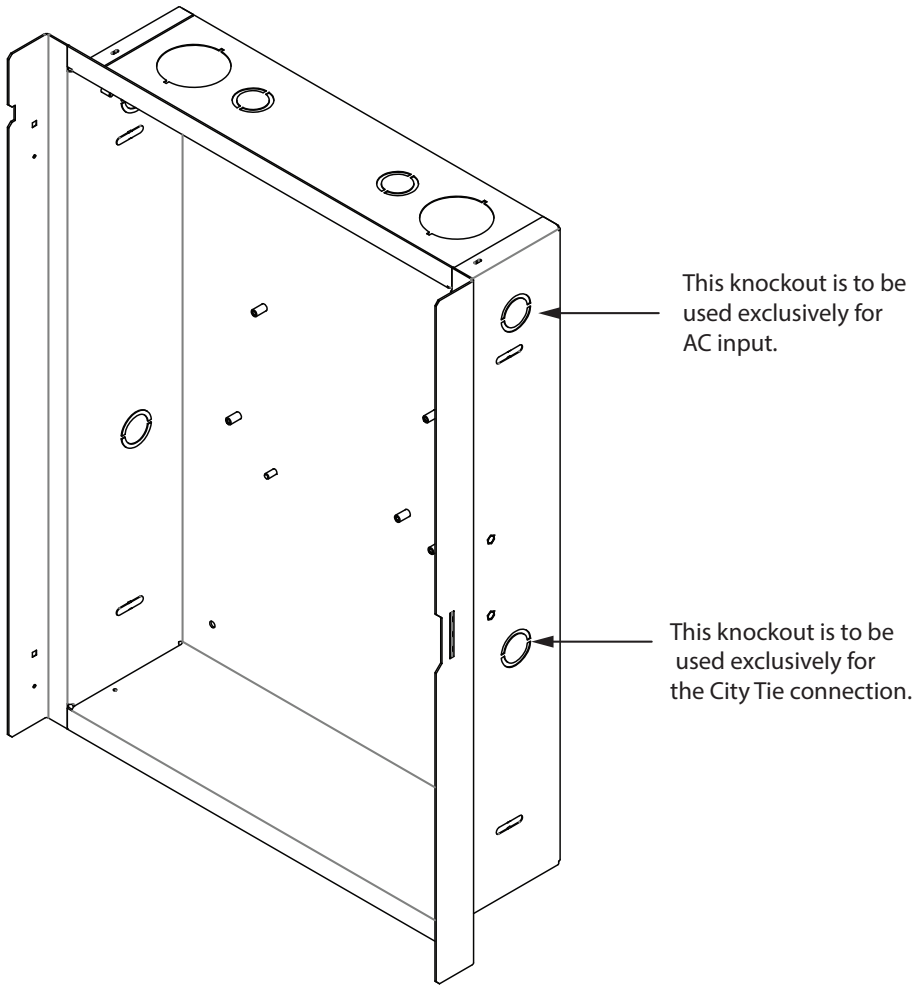


**Figure 16 Wire Routing**

## 7.3 Addressable Loop (Signaling Line Circuit) Wiring

**Note:** When an SLC device is powered by the AUX output, the supervision of the power pathway shall match the SLC pathway performance requirements.

### 7.3.1 Addressable Loop Wiring - Class B

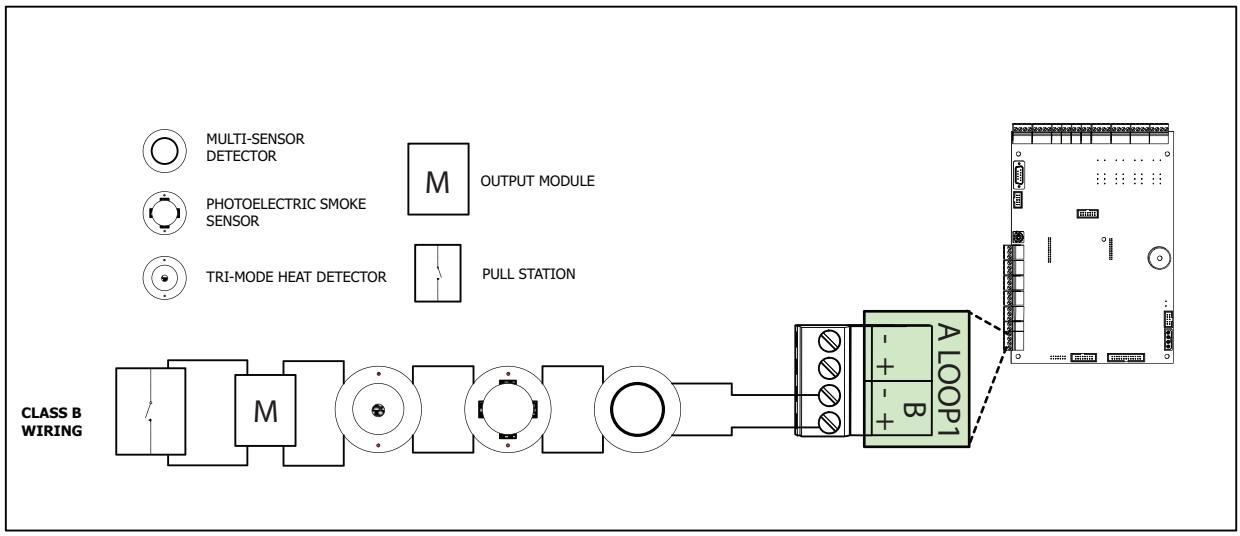


**Figure 17 Addressable Loop Wiring - Class B**

### 7.3.2 Addressable Loop Wiring - Class A

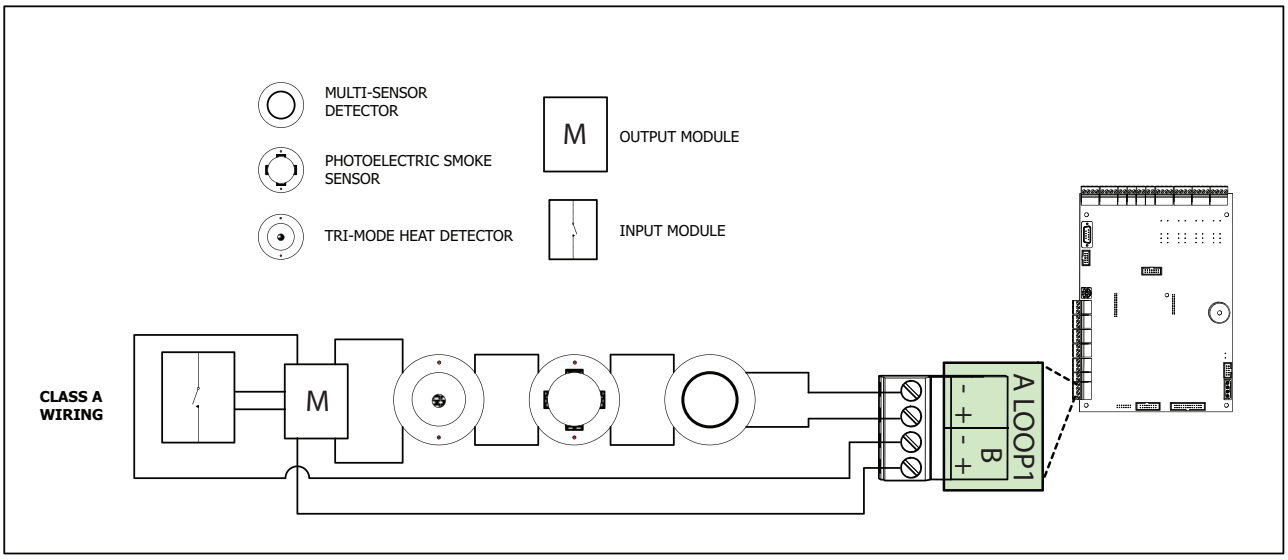


**Figure 18 Addressable Loop Wiring - Class A**

### 7.3.3 Addressable Loop Wiring - Class X

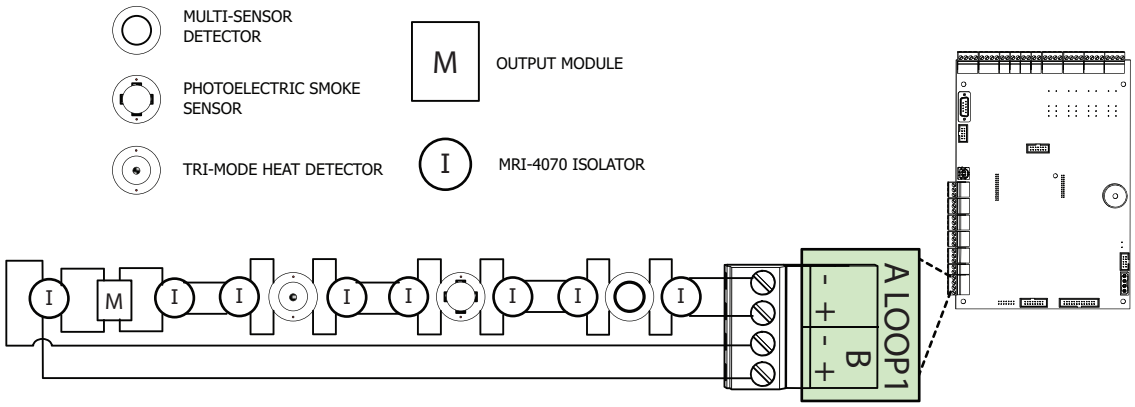


**Figure 19 Addressable Loop Wiring - Class X**

## 7.4 NAC Circuit Wiring

The MR-400 supports up to 4 NAC circuits that can be wired as either:

- Class B
- Class A

To supervise each Class B NAC circuit, use a 3.9K End-of-Line resistor.

Each NAC circuit provides up to 1.5A, total 5A of current maximum if no auxiliary power is used.

For detailed wiring diagrams see Figure 20 NAC Circuit – Class B Wiring or Figure 21 NAC Circuit – Class A Wiring.

### 7.4.1 NAC Circuit – Class B Wiring

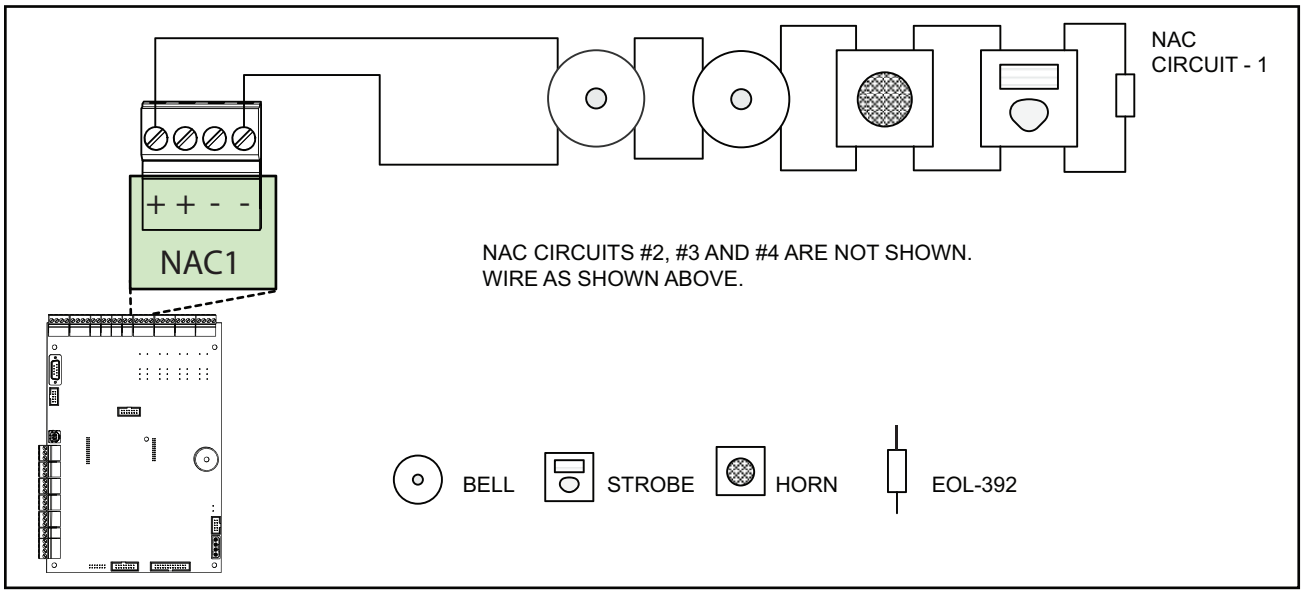


**Figure 20 NAC Circuit – Class B Wiring**

### 7.4.2 NAC Circuit – Class A Wiring

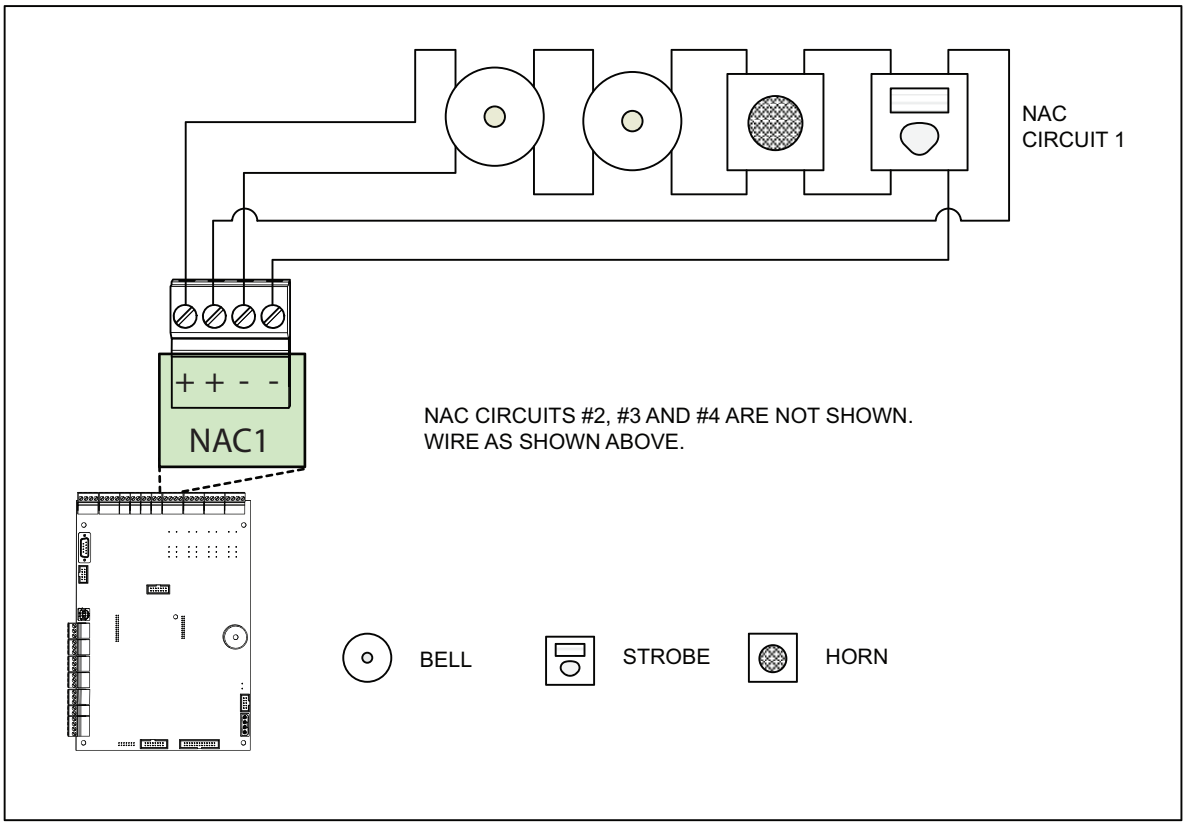


**Figure 21 NAC Circuit – Class A Wiring**

### 7.4.3 UL 864 Rev. 10 Addressable Supervised Output Module Wiring

As per UL864 Rev.10 56.4.3, ensure that a single break, ground or wire-to-wire fault on the installation conductors of a signalling circuit for use with addressable notification appliances or modules shall not affect the operation of more than one notification zone.

Exception: Riser conductors installed in accordance with the survivability from attack by fire requirements in National Fire Alarm Code, NFPA 72.

### 7.4.4 MR-2300T Common Remote Trouble Indicator Wiring

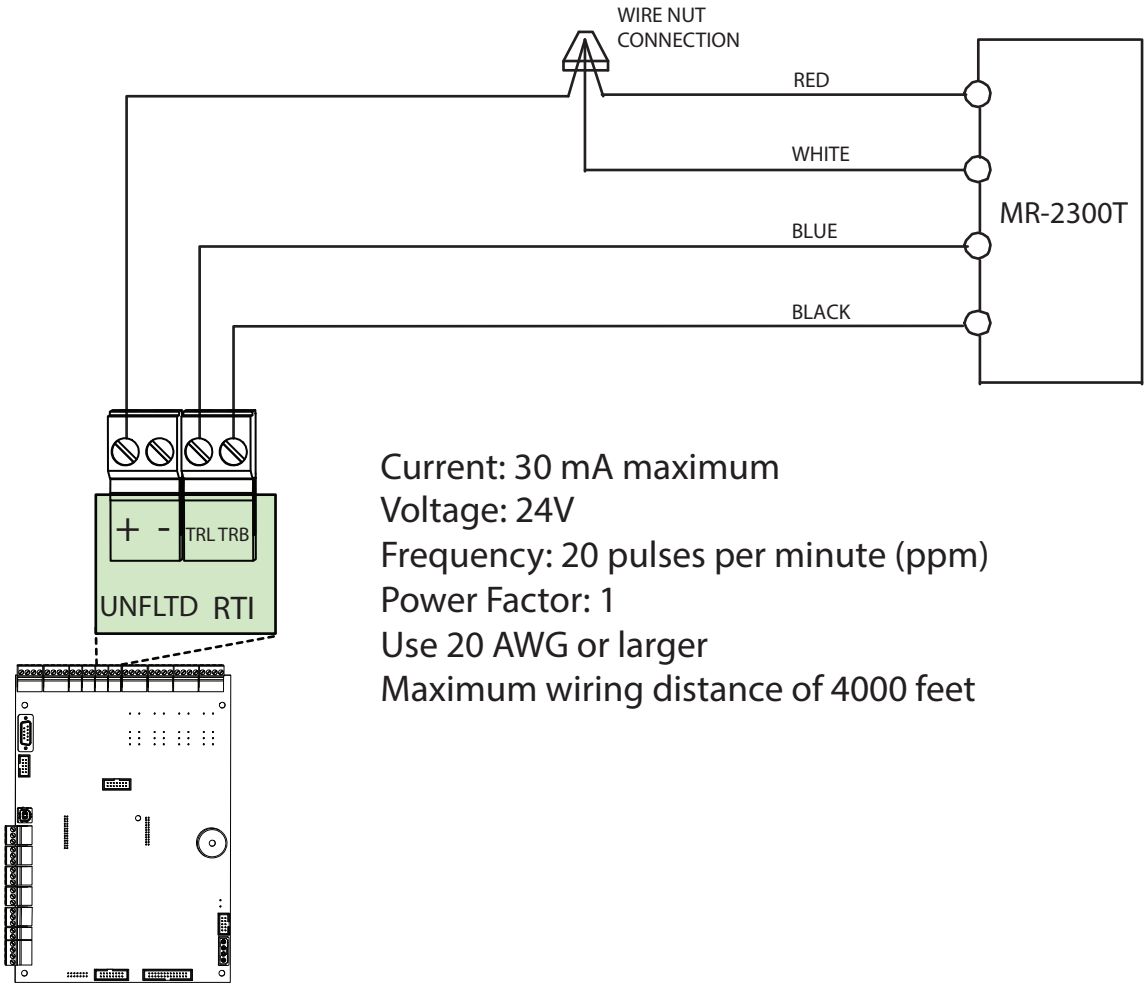


**Figure 22 MR-2300T Common Remote Trouble Indicator Wiring**

## 7.5 Module and Devices Wiring

### 7.5.1 Dialer Wiring

Wire the Dialer to the Public Telephone Switch and premises Telephone as shown in Figure 23. For information on Compatible DACR Receivers see Appendix A - Compatible Receivers on page 76.

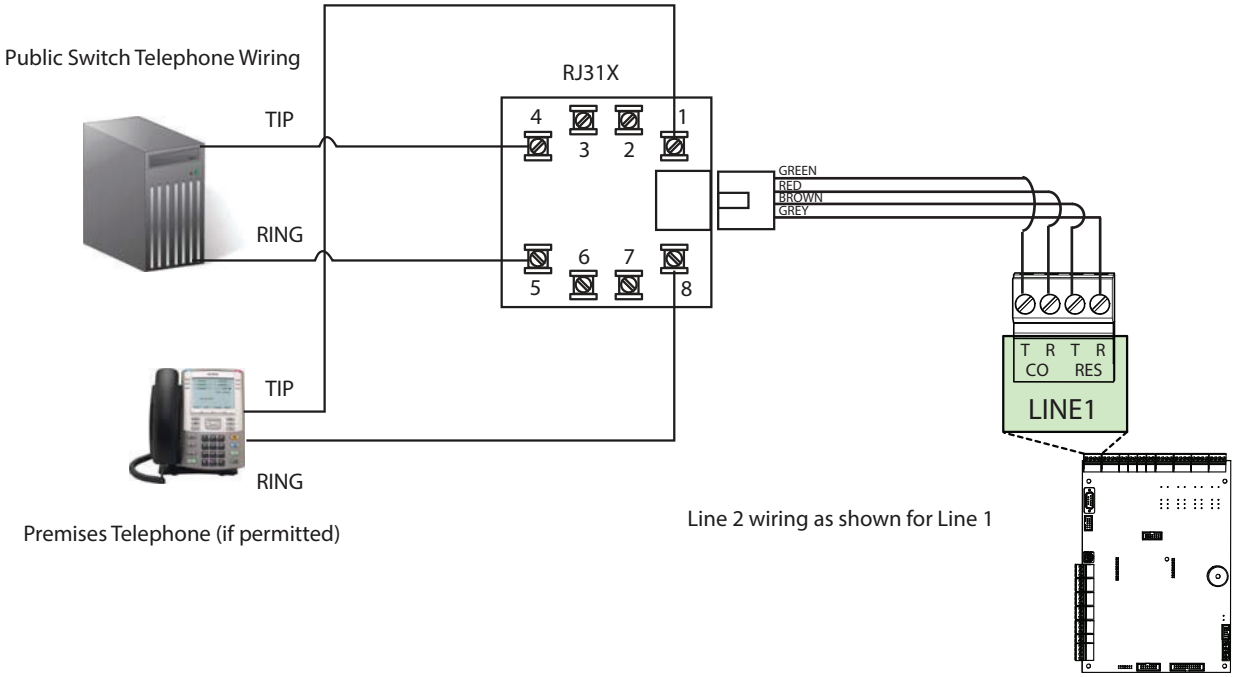


**Figure 23 Wiring the Dialer**

**Caution: To reduce the risk of fire, use only No. 26 AWG or larger telecommunication line cord.**

### 7.5.2 Connecting to a 3G4010CF Interface Device outside Canada

For information on Compatible Receivers see Appendix A - Compatible Receivers on page 76.

A typical connection is shown in Figure 25. The 3G4010CF is powered separately from the PCS-100 and requires 2 DSC RM-2 relays (sold separately). The PCS-100 Passive Communications Interface Board (sold separately) is also required.

***MR-400 - 3G4010CF Connection - Typical Diagram***

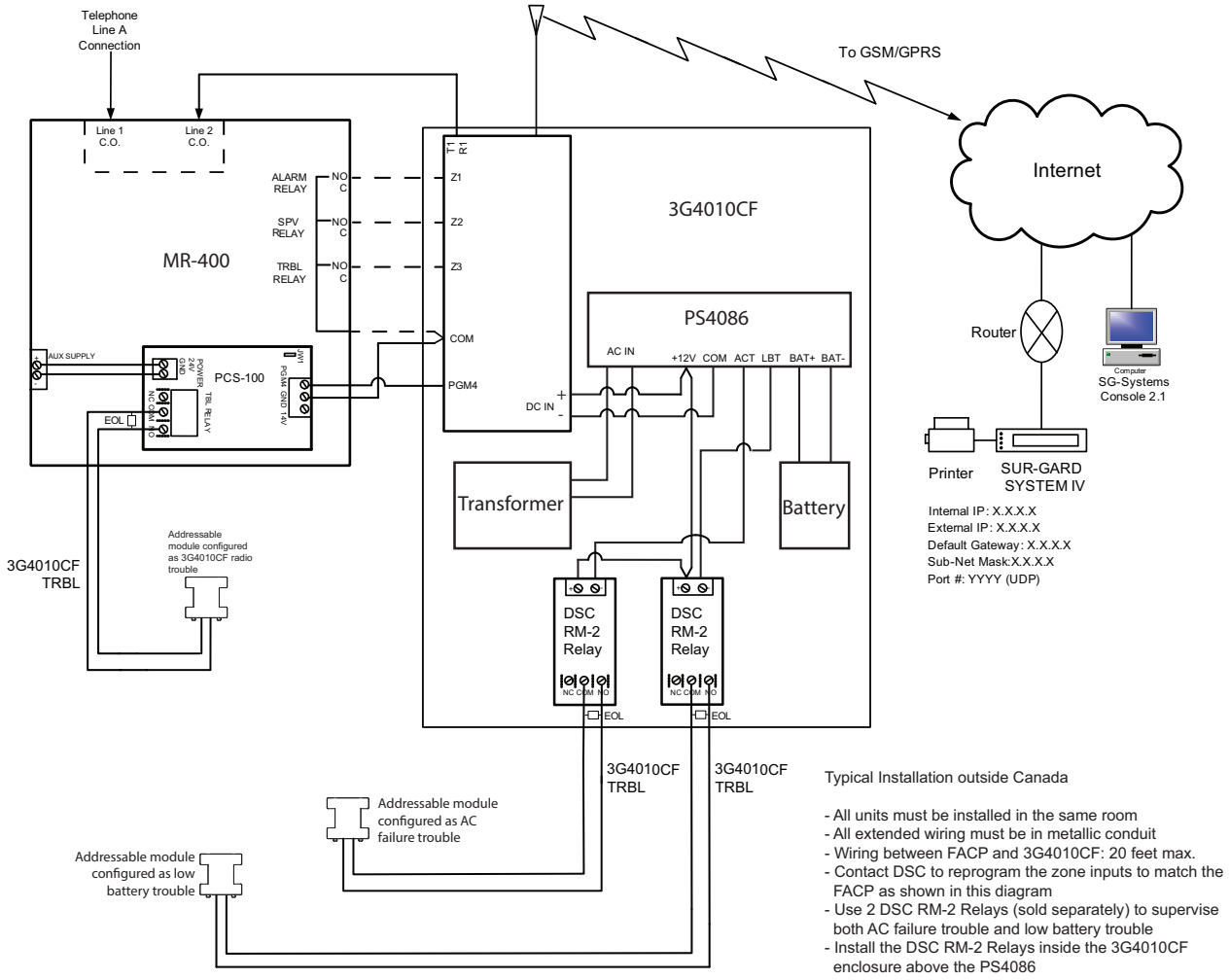


**Figure 24 Connecting an FACP to a 3G4010CF Interface Device outside Canada**

**Note:** The DSC interface device 3G4010CF is required if the installation requires UL864 10th edition certification.

### 7.5.3 Connecting to a NAPCO SLE-LTEV or SLE-LTEA Interface Device outside Canada

For information on Compatible Receivers see Appendix A - Compatible Receivers on page 76.

A typical connection is shown in Figure 25. The SLE-LTEV or SLE-LTEA is powered separately from the PCS-100. The PCS-100 Passive Communications Interface Board (sold separately) is also required.

**MR-400 - NAPCO STARLINK SLE-LTEV or SLE-LTEA Connection - Typical Diagram**

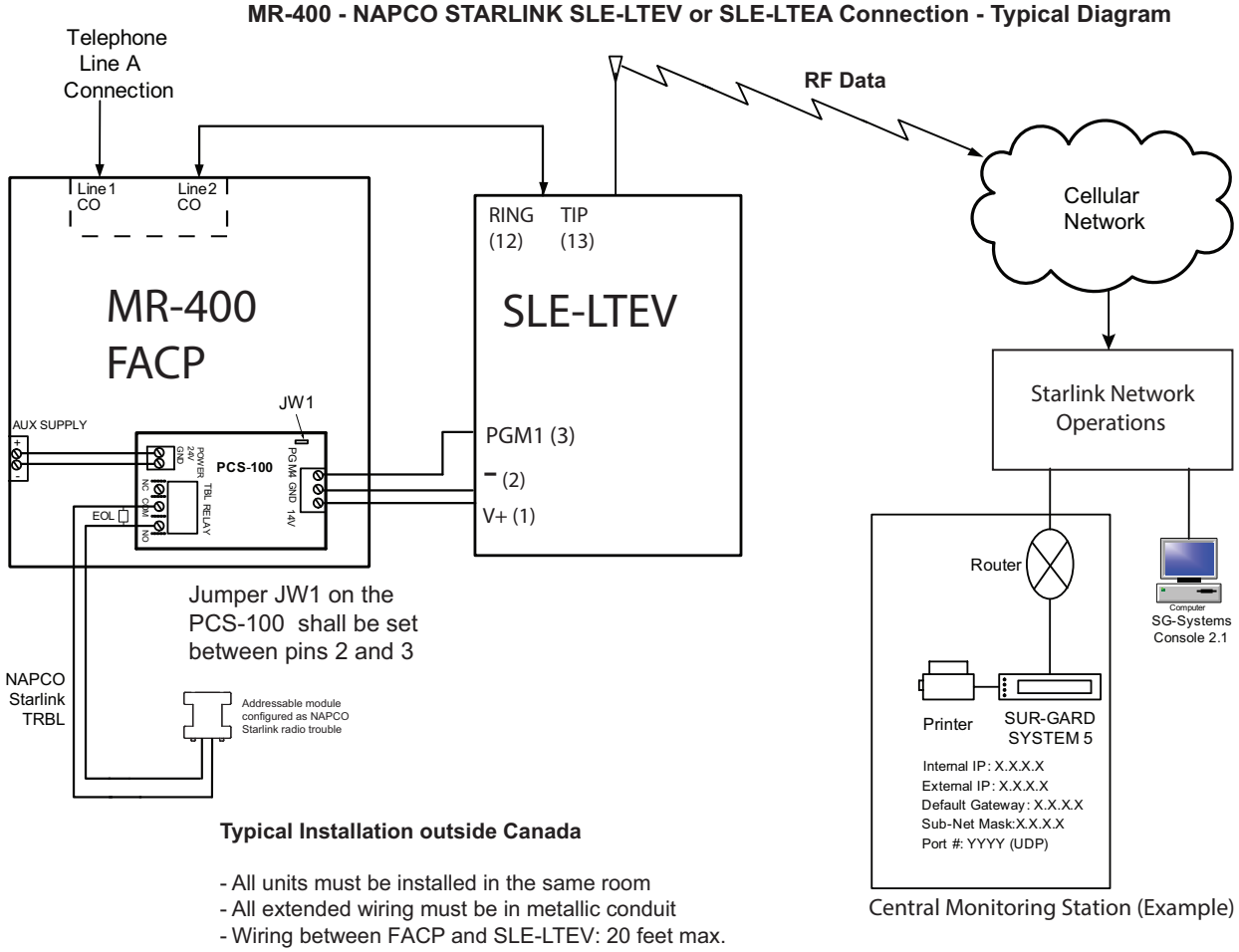


**Typical Installation outside Canada**

- All units must be installed in the same room
- All extended wiring must be in metallic conduit
- Wiring between FACP and SLE-LTEV: 20 feet max.

**Figure 25 Connecting an FACP to a SLE-LTEV or SLE-LTEA Interface Device outside Canada**

**Note:** The NAPCO interface device SLE-LTEV or SLE-LTEA is required if the installation requires UL864 10th edition certification.

### 7.5.4 MR-2300-PR Polarity Reversal and City Tie Module Wiring

Wire the MR-2300-PR Polarity Reversal and City Tie Module successfully as shown in Figure 26.

- Plug MR-2300-PR ribbon cable P1 into connector P8 on the Main Fire Alarm Board.
- Remove jumper plug from JW7 on the Main Fire Alarm Board.
- Power Limited cable type FPL, FPLR or FPLP must be used.
- For USA installation, the installer must use Atlantic Scientific (Tel: 407-725-8000), Model #24544 Protective Device, or similar UL-Listed QVRG secondary protector, as shown.

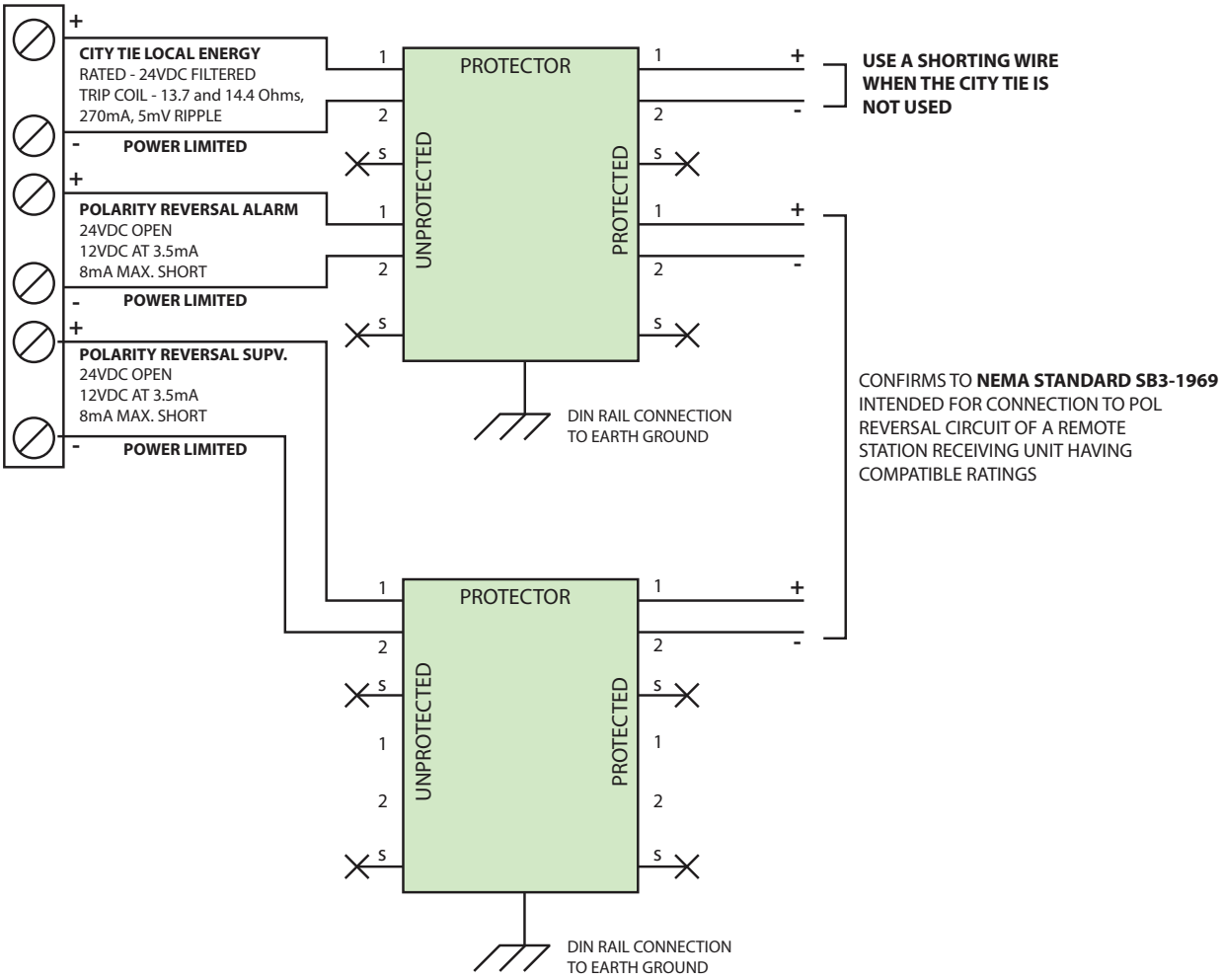


**Figure 26 Wiring the MR-2300-PR Polarity Reversal and City Tie Module**

## 7.6 Power Supply Wiring

### 7.6.1 Main Power Supply

Wiring

Wire the Power Supply as shown in Figure 27 and adhere to the following:

- Ensure that the AC supply is disconnected before wiring the power to the panel.
- Wire the AC power to the AC wiring terminals as shown in Figure 27 using the proper wire gauge with 600 volt insulation and proper over current circuit protection that complies with local codes.

For MR-400 Power Supply Electrical Ratings see Table 15 Power Supply Electrical Ratings and for Specifications see Appendix D - Specifications on page 85.

**Table 15 Power Supply Electrical Ratings**

| Type | Electrical Rating |
|---|---|
| Electrical Input Rating | **120** VAC, 60 Hz, 1.81 A / **240** VAC, 50 Hz, 0.98 A |

**Attention: The main AC branch circuit connection for the Fire Alarm Control Unit must provide a dedicated continuous power without any disconnect devices.**

**Fire alarm systems must be installed in compliance with local codes and standards and with the Authority Having Jurisdiction (AHJ).**

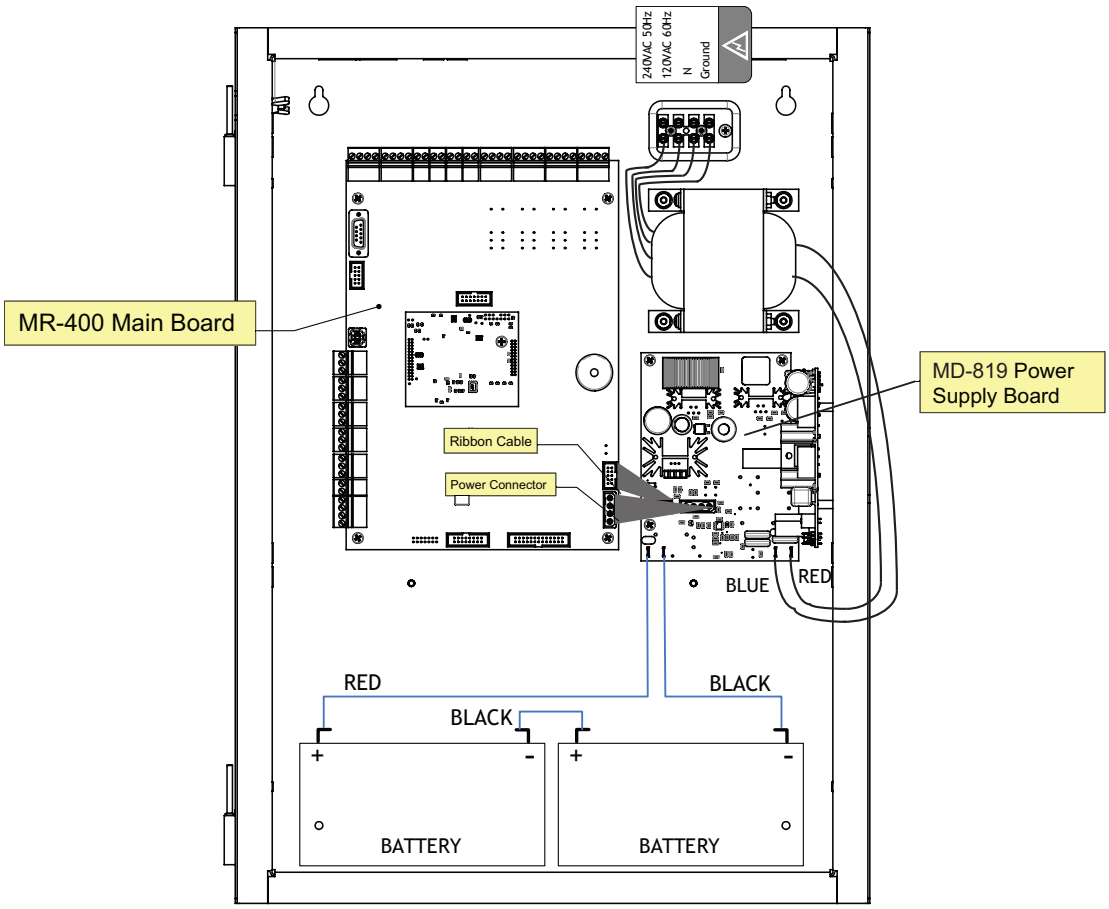


**Figure 27 Main Power Supply Wiring and Connections**

## 7.6.2 Supervision (Class B) of Auxiliary Supplies

### Aux 2 Resettable Auxiliary Power (supervised, regulated)

The AUX 2 resettable auxiliary power supply is supervised for shorts.

A short will:

- Disconnect the power until the “RESET” button is pressed.
- Generate a trouble signal.

The circuit must be supervised for opens utilizing the End of Line Relay Model EOLR-1. This supply is rated at 24VDC regulated/300mA max/1V voltage drop maximum.

### Aux 1 Auxiliary Supply (supervised, regulated)

The AUX 1 auxiliary power is used to power the remote annunciators and smart relay modules.

This filtered circuit is supervised for shorts.

A short will:

- Disconnect the power until the “RESET” button is pressed.
- Generate a trouble signal.

The circuit must be supervised for opens utilizing the End of Line Relay Model EOLR-1 as shown in Figure 15. This supply is rated at 24VDC regulated/500mA max/1V voltage drop maximum.

**Unfiltered Supply (unsupervised, unregulated)**

This unregulated supply is not supervised. When supervision is required, the circuit must be supervised for opens utilizing the (UL listed - S3705) End of Line Relay Model EOLR-1. This supply is rated at 24V FWR/1.7A max. If there is a short on this circuit, the auxiliary power does not recover automatically when the short is removed. The main power and the battery must be disconnected, then reconnected and the panel reset to re-establish the auxiliary power supply.

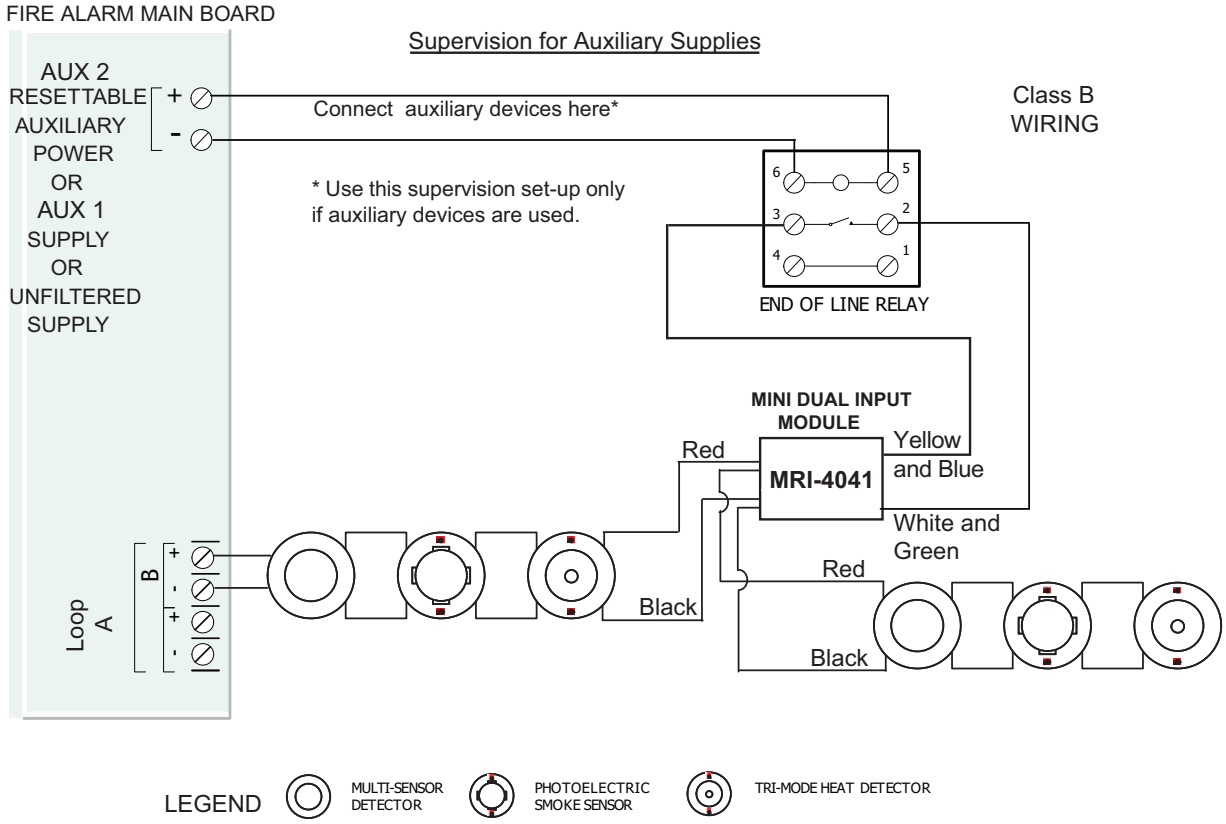


**Figure 28 Supervision of Auxiliary Supplies**

## 7.7 System Checkout

The following are the recommended steps before and during the powering up of the MR-400.

### 7.7.1 Before Turning The Power ON

1. To prevent sparking, DO NOT connect the batteries first. Connecting the batteries is only to be done after the system has been powered from the main AC Supply.
2. Check all field (external) wiring for opens, shorts, and ground.
3. Check that all interconnection cables are secure, and that all connectors are plugged-in properly.
4. Check all Jumpers and Switches for proper setting.
5. Check the AC power wiring for proper connection.
6. Check that the chassis is connected to EARTH GROUND (cold water pipe).
7. Close the front cover plate before powering the system from main AC supply.

### 7.7.2 Power-up Procedure

1. After completing 7.7.1 Before Turning The Power ON procedures, power-up the panel. The green **AC-ON** LED should illuminate.
2. Since the batteries are not connected, the **Battery Trouble** LED should illuminate, the **Common Trouble** LED should flash and the Trouble Relay (on the main board) will be active.
3. Connect the batteries while observing correct polarity; the red wire is positive (+) and black wire is negative (-).
4. All indicators should extinguish except for normal power **AC-ON** green LED.

## 7.8 Troubleshooting

The following are common methods to solving Circuit Ground Fault, Battery and Common troubles.

### 7.8.1 Circuit Trouble

Normally when a circuit trouble occurs, the Common Trouble indicator will be illuminated and the common trouble relay will be active. Additionally, the corresponding LED on the main board will be illuminated. This can be viewed by opening the panel and looking the top of the board. To correct the fault, check for open wiring on that particular circuit loop.

### 7.8.2 Ground Fault

This panel has a common ground fault detector. To correct the fault, check for any external wiring touching the chassis or other Earth Ground connection.

### 7.8.3 Battery Trouble

Check for the presence of batteries and their conditions. Low voltage (below 20.4V) will cause a battery trouble. If battery trouble condition persists, replace batteries as soon as possible.

### 7.8.4 Common Trouble

If only a common trouble is indicated on the main panel and none of those above confirming trouble indicators are on, then check the following for possible fault

- any missing interconnection wiring
- improperly secured cabling

# 8.0 Appendix A - Compatible Receivers

The built-in dialer in the MR-400 Fire Alarm Control Panel is compatible with the following Digital Alarm Communicator Receivers (DACR) listed:

**Table 16 Compatible DACR Receivers**

| DACR Receiver | Model Protocols |
|---|---|
| SurGard MLR2 Multi-Line Receiver (ULI Approved) | SIA Format Protocol and SIA Contact ID |
| SurGard SLR Single-Line Receiver (ULI Approved) | SIA Format Protocol and SIA Contact ID |
| Osborne-Hoffman Quickalert! II Receiver (ULI Approved) | SIA Format Protocol and SIA Contact ID |
| Osborne-Hoffman OH-2000 Receiver (ULI Approved) | SIA Format Protocol and SIA Contact ID |
| Silent Knight Model 9500 Receiver (ULI Approved) | SIA Format Protocol and SIA Contact ID |
| Radionics Model D6500 Receiver (ULI Approved) | SIA Format Protocol and SIA Contact ID |
| Radionics Model D6600 Receiver (ULI Approved) | SIA Format Protocol and SIA Contact ID |
| DSC SurGard System III Receiver (ULI Approved*) | SIA Contact ID |
| DSC SurGard System IV Receiver (ULC, ULI Approved) | SIA Contact ID |
| DSC SurGard System 5 Receiver (ULI Approved**) | SIA Contact ID |

**Note:** *Approved when used with DSC 3G4010CF or NAPCO Starlink SLE-LTEV or SLE-LTEA Universal Wireless Alarm Communicators through wireless IP connection.

# 9.0 Appendix B - Manual Panel Configuration

## COMMAND MENU

The command menu is the first menu displayed for command mode. The command menu is divided into four main sub menu categories, the configuration allows full front panel configuration of the system and the operation menu performs certain operations which may not be possible using the common control switches and indicators on the front panel.

**Note:** See section 6.2.1 for instructions on using the numeric keypad to navigate the menus.

-- Command menu --

1. Configuration
2. Auto config.
3. Operation
4. Reset Config

## COMMAND MENU/ CONFIGURATION INFORMATION

To see configuration information:

1. Press the **Menu** button.
2. Press the **Info** button.

The first line shows the firmware version and the type of panel. The second and third lines show the job name and version. The fourth line shows the date and time when the panel was configured.

## COMMAND MENU/ 1. CONFIGURATION MENU

The configuration menu is divided into the following submenu items.

-- Configuration --

1. Panel config
2. UDACT config
3. Time config
4. AfterHrs cfg.

## CONFIGURATION MENU/1. PANEL CONFIGURATION

The panel configuration is further sub divided into the following submenus.

-- Panel Config --
1. Features
2. Address cfg.
3. Device label
4. User message
5. Language

# PANEL CONFIGURATION/1. FEATURES

The features described are the overall features of the system and their impact is system wide. The default setting in some features is shown as selected.

### Panel Configuration/Features/Manual Signal Silence

Manual Signal Sil.

[x] Enabled

The manual signal silence option will allow silencing of the signal, from the common control signal silence switch, when they are active.

### Panel Configuration/Features/Fire Drill

Fire Drill

[x] Enabled

This function is used to enable/disable fire drill operation from the fire common control fire drill switch at the front panel.

### Panel Configuration/Features/Waterflow Retard

Waterflow retard

[ ] Enabled

If disabled, all the initiating circuits configured as waterflow act as non-verified alarms. If enabled, retard operation is performed for initiating circuits configured as waterflow.

### Panel Configuration/Features/Auxiliary disconnect, disconnects alarm and supervisory relay

Aux Dis Alm&Sv

[ ] Enabled

If enabled the auxiliary disconnect operation, disconnects alarm and supervisory relays disabled the auxiliary disconnect operation has no affect on the alarm and supervisory relays. Default is disabled.

### Panel Configuration/Features/Signal silence inhibit timer

Sig.sil. inh.

[x] Disabled

[ ] 10 sec.

[ ] 20 sec.

[ ] 30 sec.

[ ] 1 min.

Select the timer value for the signal silence inhibit timer.

### Panel Configuration/Features/Auto signal silence timer

Auto sil. tmr

[x] Disabled

[ ] 5 min.

[ ] 10 min.

[ ] 15 min.

[ ] 20 min.

[ ] 30 min.

Select timer value for the auto signal silence timer.

### Panel Configuration/Features/Alarm transmit silence

Alm. xmit. sil.

[ ] Enabled

This feature allows the alarm transmits and auxiliary alarm relay to reset on “SIGNAL SILENCE” rather than the “RESET” switch if enabled. The default is disabled.

### Panel Configuration/Features/Power fail timer

Pwr fail tmr.

[x] None

[ ] 1 hr.

[ ] 2 hrs.

[ ] 3 hrs.

This feature allows a programmed delay before the AC fail trouble is transmitted by the optional MR-2300-PR. (Note: the delay for transmission by the dialer is configured under Dialer Configuration – Item 4 –Time Parameters - AC Loss Delay)

### Panel Configuration/Features/Common supervisory relay

Com. supv. rly

[ ] Enabled

This feature is used to make the common supervisory relay acts as a common alarm relay if enabled. Default is disabled

### Panel Configuration/Features/Signal silence isolator

Sig. isolators

[ ] Enabled

This feature makes the system aware that the isolators are present on the main panel powered output circuits if enabled. The default is disabled.

### Panel Configuration/Features/Strobe types

Strobes type

[x] Normal

[ ] Gentex

[ ] System Sensor

[ ] Mircom

[ ] Wheelock

Select the strobe manufacturer for synchronous strobes. Synchronous strobes are driven by following a different ON/OFF pattern depending on the manufacturer’s specification. Normal means the strobes are not synchronized and when the circuit gets active it is turned ON steady. This feature applies to the main panel powered output circuits, configured as strobes, only.

**Note:** Once a specific type of strobe is selected, for example Secutron, then only this type of strobe is allowed for the entire system.

### Panel Configuration/Features/Evacuation code

Evac. Code

[ ] Continuous

[ ] March Time

[x] Temporal

[ ] California

Select the evacuation code for the 2nd stage in a two stage system and for the 1st stage in a single stage system.

**Panel Configuration/Features/Building alert**

Bldg. alert

[ ] Enabled

Alert sounds for building input activation. The default is disabled.

**Panel Configuration/Features/Device LED flashing**

Dev. Flash

[ ] Enabled

This feature allows flashing of the LED on the addressable sensors to flash momentarily, while polling, if enabled. The input and output modules LED always flashes, while polling, regardless of this feature enabled or disabled.

**Panel Configuration/Features/Class-A loop**

Loop ClassA

[ ] Enabled

This feature configures all addressable loops as Class A if enabled.

**Panel Configuration/Features/Auto after hours**

Auto afthrs.
[ ] Enabled

This feature allows the daytime/nighttime mode to be set automatically if enabled.

**Panel Configuration/Features/General alarm timer**

Gen.alm tmr

[x] Disabled

[ ] 5 min.

[ ] 10 min.

[ ] 15 min.

[ ] 20 min.

[ ] 30 min.

This feature sets the value for the general alarm timer.

**Panel Configuration/Features/Common alarm relay operation**

This section is reserved for future use.

**Panel Configuration/Features/Agency selection**

Jurisdiction

[x] ULI

[ ] ULC

Default is ULI. This feature selects the ULI or ULC default configuration.

**Panel Configuration/Features/Auxiliary Reset Key**

Aux. Reset Key

[x] Enabled

This feature is disabled by default. If this feature is enabled, the Buzzer Silence switch functions as an Auxiliary Reset switch.

In this case, you can silence the buzzer by pressing any button except the ones listed below:

- General Alarm
- Signal Silence
- Aux Reset (previously Buzzer Silence)
- Aux Disconnect
- Fire Drill
- System Reset

## PANEL CONFIGURATION/2. ADDRESS CFG.

This section is reserved for future use.

## PANEL CONFIGURATION/3. DEVICE LABEL

Allows you to edit the device label. Device Address Prompt:

Device address:

Loop: _ Addr:

User is then prompted for adding a label (skipped if current label):

Add label? Y (N)

Enter the new label using the keypad. Press the “#” key to move cursor to the left, press the “*” key to move cursor to the right:

Enter new tag...

_____

## PANEL CONFIGURATION/4. USER MESSAGE

Allows you to edit (change) the FACP Front Panel Message, for example “Welcome to Secutron”.

## PANEL CONFIGURATION/5. LANGUAGE

Allows you to select the language of the LCD display. English is the default. To change the language to French, select French in the panel configuration menu, then exit the configuration and then re-enter and select auto default.

## COMMAND MENU/ 2. AUTO CONFIG

The Auto Config menu item detects the currently connected devices, and compares them to the existing configuration. If there are differences, you can choose to update the configuration. Use Auto Config when the job is already configured and you are making a change to devices or loops.

Select **2. Auto Config** and follow the instructions on the display.

**Notes:** After performing Auto Config, you must finish setting up the job in the Configurator software, for example, creating correlations and adding tags.

## COMMAND MENU/ 4. RESET CONFIG

The Reset Config feature allows fast configuration of a new site. It detects all connected devices and creates a job file. Use Reset Config to configure the panel for the first time.

1. Wire the MRI-4000 devices to the panel and power up the panel (as described in section 7.7 on page 75).
2. On the display, select **4. Reset Config**.

   Reset Configuration? Y (N)
3. Select **Y**.
4. Connect the MGC-400 Configurator to the panel and get the job.
5. Finish setting up the job in the MGC-400 Configurator. For example, assign tags and create correlations.
6. Send the job to the panel.

# 10.0 Appendix C - Reporting

## 10.1 Ademco Contact-ID MR-400 Series Event Codes

**Table 17 Contact-ID Event Codes**

| Event Description | Event Family | Qualifier | Code | Group # | Contact # |
|---|---|---|---|---|---|
| Phone Line #1 trouble detected | Trouble | New event | 1 351 | 00 | 000 |
| Phone Line #2 trouble detected | Trouble | New event | 1 352 | 00 | 000 |
| Phone Line #1 trouble restored | Trouble | Restore | 3 351 | 00 | 000 |
| Phone Line #2 trouble restored | Trouble | Restore | 3 352 | 00 | 000 |
| Failure to report to an Account | Trouble | New event | 1 354 | Acct # | Acct # |
| Report to an Account successful | Trouble | Restore | 3 354 | Acct # | Acct # |
| RS-485 Communication Trouble | Trouble | New event | 1 350 | 00 | 485 |
| Periodic (24 hr) Test Event (NORMAL) | Test | New event | 1 602 | 00 | 000 |
| Periodic (24 hr) Test Event (OFF NORMAL) | Test | New event | 1 608 | 00 | 000 |
| Manually initiated dialer test | Test | New event | 1 601 | 00 | 000 |
| Zone Fire Alarm | Alarm | New event | 1 110 | 00 | NNN |
| Zone Fire Alarm restored | Alarm | Restore | 3 110 | 00 | NNN |
| Zone Trouble detected | Trouble | New event | 1 300 | 00 | NNN |
| Zone Trouble restored | Trouble | Restore | 3 300 | 00 | NNN |
| Zone Supervisory condition | Supervisory | New event | 1 200 | 00 | NNN |
| Zone Supervisory restored | Supervisory | Restore | 3 200 | 00 | NNN |
| Water flow | Alarm | New event | 1 113 | 00 | NNN |
| Water flow restored | Alarm | Restore | 3 113 | 00 | NNN |
| Indicating Zone Trouble | Trouble | New event | 1 320 | 00 | NNN |
| Indicating Zone Trouble restored | Trouble | Restore | 3 320 | 00 | NNN |
| General Alarm | Alarm | New event | 1 140 | 00 | NNN |
| General Alarm restored | Alarm | Restore | 3 140 | 00 | NNN |
| AC power lost | Trouble | New event | 1 301 | 00 | 000 |
| AC power restored | Trouble | Restore | 3 301 | 00 | 000 |
| Battery Low | Trouble | New event | 1 302 | 00 | 000 |
| Battery Low restored | Trouble | Restore | 3 302 | 00 | 000 |
| Ground Fault | Trouble | New event | 1 310 | 00 | 000 |
| Ground Fault restored | Trouble | Restore | 3 310 | 00 | 000 |

## 10.2 Security Industries Association SIA Format Protocol MR-400 Series Event Codes

SIA Format Protocol does not define indicating zone troubles, but lists it as Untyped Zone Trouble/Restore.

**Table 18 SIA-DCS Event Codes**

| Event Description | Event Family | Qualifier | SIA Event Code | Parameter |
|---|---|---|---|---|
| Phone Line #1 trouble detected | Trouble | New event | LT | 001 |
| Phone Line #2 trouble detected | Trouble | New event | LT | 002 |
| Phone Line #1 trouble restored | Trouble | Restore | LR | 001 |
| Phone Line #2 trouble restored | Trouble | Restore | LR | 002 |
| Failure to report to an Account | Trouble | New event | YC | Acct # |
| Report to an Account successful | Trouble | Restore | YK | Acct # |
| RS485 Communication Trouble | Trouble | New event | YS | 485 |
| Periodic (24 hr) Test Event (Normal) | Test | New event | RP | 000 |
| Periodic (24 hr) Test Event (Off-normal) | Test | New event | RY | 000 |
| Manually initiated dialer test | Test | New event | RX | 000 |
| Zone Fire Alarm | Alarm | New event | FA | NNN |
| Zone Fire Alarm restored | Alarm | Restore | FH | NNN |
| Zone Trouble detected | Trouble | New event | FT | NNN |
| Zone Trouble restored | Trouble | Restore | FJ | NNN |
| Zone Supervisory condition | Supervisory | New event | FS | NNN |
| Zone Supervisory restored | Supervisory | Restore | FR | NNN |
| Water flow alarm | Alarm | New event | WA | NNN |
| Water flow alarm restored | Alarm | Restore | WH | NNN |
| General Alarm | Alarm | New event | QA | NNN |
| General Alarm restored | Alarm | Restore | QH | NNN |
| Indicating Zone Trouble (*) | Trouble | New event | UT | NNN |
| Indicating Zone Trouble restored (*) | Trouble | Restore | UR | NNN |
| AC power lost | Trouble | New event | AT | 000 |
| AC power restored | Trouble | Restore | AR | 000 |
| Battery Low | Trouble | New event | YT | 000 |
| Battery Low restored | Trouble | Restore | YR | 000 |
| Ground Fault | Trouble | New event | YP | 000 |
| Ground Fault restored | Trouble | Restore | YQ | 000 |

# 11.0 Appendix D - Specifications

## 11.1 MR-400 Fire Alarm Control Panel

Table 19 lists specifications for the MR-400 panel:

**Table 19 MR-400 Specifications**

| MR-400 Fire Alarm Control Panel | | |
|---|---|---|
| **General** | Digital signal processor based design, fully configurable from front panel with password protection. | |
| **Electrical ratings** | **AC line voltage** | 120VAC 60Hz/240VAC 50Hz, 10A slow blow micro in-line fuse (not field replaceable) |
| | **Power supply rating** | 29VAC 6A maximum (secondary of transformer) |
| | | 120VAC 60Hz 1.81Amp (maximum primary of transformer) |
| | | 240VAC 50Hz 0.98Amp (maximum primary of transformer) |
| | | Total load not to exceed 5A at 24VDC |
| **Battery** | **Type** | 24VDC Gel Cell/Sealed lead acid – 10Ah to 24Ah |
| | **Charging capability** | 10Ah to 24Ah |
| | **Charging current** | 1.575A maximum |
| | **Protection** | 10A on-board slow blow micro fuse (not field replaceable) |
| | **Standby current rating at full load** | 0.7A |
| **Addressable loop** | Secutron Protocol SLC loop with 240 addressable devices. Maximum loop resistance depends on number of devices and device type. For a complete list of compatible devices see LT-1023SEC Compatible Devices Guide. | |
| | Power Limited / 24V DC / 350mA alarm maximum / 0.5 µF | |
| | Power Limited / 24V DC / 280mA normal standby maximum / 0.5 µF | |
| **NAC Circuits** | 4 supervised Class B NAC circuits, configured as strobes or audibles. Terminals are labelled as “NAC 1”, “NAC 2”, “NAC 3” and “NAC 4”. | |
| | **Rating** | Power limited / Regulated 24V FWR / 1.5A @ 49°C per circuit |
| | **Max power allowed** | Total 5.0A |
| | | 1.5A per circuit |
| **Aux supply 1** | Power limited / 24VDC regulated / 500mA max | |
| **Aux supply 2** | Resettable Power limited / 24VDC regulated / 300mA max | |
| | Use this supply for MRI-4042. | |
| **Unfiltered supply** | Power limited / 24V FWR special application / 1.7A max at 49°C | |
| | List of Compatible Devices: RAM-1032TZDS, RAM-3318-LCD, RAX-LCD-LITE | |

**Table 19 MR-400 Specifications (Continued)**

| MR-400 Fire Alarm Control Panel | | |
|---|---|---|
| **Auxiliary relays** | **Common Alarm/ Supv./Trouble/ Auxiliary Alarm** | Must be connected to a listed power limited source of supply, Form C/28VDC/1A max |
| **RS-485 port** | For remote annunciators. Terminals are labelled “RS-485” | |
| **Ground Fault Impedance** | 10 K Ohms | |
| **Open Circuit Fault** | 100 K Ohms | |
| **Short Circuit Fault** | 0 Ohms | |
| **Applicable Standards** | NFPA 70, 72, UL-864 | |

## 11.2 MR-400 System Module and Annunciator Specifications

**Table 20 MR-400 Modules and Annunciator Specifications**

| MR-400 System Modules and Annunciators | | |
|---|---|---|
| **RAM-3318-LCD** | Remote Annunciator | Standby 70mA / alarm 100mA |
| **RAX-LCD-LITE** | Remote Annunciator | Standby 65mA / alarm 80mA |
| **MR-2300T** | Remote Trouble Indicator | Normal standby 0mA / alarm 30mA maximum |
| **MR-2300-PR** | Polarity Reversal and City Tie Module | |
| | **City Tie** | power limited / 24VDC unfiltered / 270mA max / 13.7 and 14.4 Ohms |
| | **Polarity Reversal** | power limited / 24VDC open / 12VDC at 3.5mA / 8mA max (shorted) |
| | **Polarity Reversal Supv. Terminal** | 24VDC (normal) / -24VDC (supervisory) / 0V (trouble) |
| | **Polarity Reversal Alarm Terminal** | 24VDC (normal) / -24VDC (alarm) / 0V (trouble) |
| | **Current Consumption** | standby 50mA / alarm 300mA (city tie in use) / alarm 70mA (city tie not in use) |

# 12.0 Appendix E - Battery Calculations

| IMPORTANT NOTICE |
|---|
| The main AC branch circuit connection for Fire Alarm Control Unit must provide a dedicated continuous power without provision of any disconnect devices. Use #12 AWG wire with 600-volt insulation and proper over-current circuit protection that complies with the local codes. For specifications see Appendix D - Specifications. |

Power Requirements (All currents are in amperes)

| Model Number | Description | Qty | | Standby | Total Standby | Alarm | Total Alarm |
|---|---|---|---|---|---|---|---|
| MR-400 | MR-400 FACP with Dialer | | X | 0.225 | = | 0.430 | = |
| RAM-3318-LCD | Remote Annunciator with 4-line LCD Display | | X | 0.070 | = | 0.100 | = |
| RAX-LCD-LITE | Remote Annunciator with 4-line LCD Display | | X | 0.065 | = | 0.080 | = |
| MR-2300-PR | Polarity Reversal and City Tie Module | | X | 0.050 | = | 0.300 | = |
| MR-2312-SW12 and MR-2312-SR12 | Smart Relay Module | | X | 0.030 | = | 0.030 per relay LED | = |
| RAM-1032TZDS | 32 Point Remote Annunciator | | X | 0.050 | = | 0.300 | = |
| RAX-1048TZDS | 48 Point adder annunciator display | | X | 0.022 | = | 1 zone active: 0.026<br>2 zone active: 0.030<br>3 zone active: 0.035<br>4 zone active: 0.039<br>48 zone active: 0.262 | = |
| IPS-2424DS | Programmable Input Switches Module with 24 switches | | X | 0.005 | = | 0.022 | = |
| IPS-4848DS | Programmable Input Switches Module with 48 switches | | X | 0.010 | = | 0.022 | = |
| MR-2300T | Remote Trouble Indicator, Buzzer and LED | | X | 0.035 | = | 0.035 | = |
| MRI-4040 | Dual Input Module | | X | 0.0020 | = | 0.0033 | = |
| MRI-4041 | Mini Dual Input Module | | X | 0.0020 | = | 0.0033 | = |
| MRI-4042 | Conventional Zone Module | | X | 0.0016 | = | 0.0030 | = |
| MRI-4045 | Dual Relay Module | | X | 0.0015 | = | 0.0031 | = |
| MRI-4046 | Supervised Output Module | | X | 0.0018 | = | 0.0025 | = |
| MRI-4070 | Short Circuit Isolator Module | | X | 0.0006 | = | 0.0096 | = |
| MRI-4010 | Photoelectric Smoke Detector | | X | 0.000160 | = | 0.0032 | = |
| MRI-4010-ISO | Photoelectric Smoke Detector with Isolator | | X | 0.000160 | = | 0.0032 | = |
| MRI-4020 | Multi-Sensor Detector | | X | 0.000160 | = | 0.0032 | = |
| MRI-4020-ISO | Multi-Sensor Detector with Isolator | | X | 0.000160 | = | 0.0032 | = |
| MRI-4030 | Tri-Mode Heat Detector | | X | 0.000160 | = | 0.0032 | = |
| MRI-4030-ISO | Tri-Mode Heat Detector with Isolator | | X | 0.000160 | = | 0.0032 | = |
| MRI-4003-R | Relay base | | X | 0.00116 | = | 0.00118 | = |
| MRI-4003-S | Sounder base | | X | 0.00156 | = | 0.00234 | = |
| MRI-4040-M | Multi-Input module | | X | 0.004 | = | 0.0083 | = |

| | | | | | | | |
|---|---|---|---|---|---|---|---|
| MRI-4045-M | Multi-Relay module | | **X** | 0.0019 | = | 0.0083 | = |
| MRI-4070-M | Multi-Isolator module | | **X** | 0.00056 per used section | = | 0.0095 per activated section | = |
| MIX-4010-DUCT | Duct Detector | | **X** | 0.000160 | = | 0.0032 | = |
| INX-10A | Main Chassis (10 Amp) | | **X** | 0.035 | = | 0.0150 | = |
| Device & Remote LEDs (Maximum 20 per loop) | | | **X** | | | | = |
| Signal Load (bells, horns, strobes, and etc.) | | | **X** | | | | = |
| Auxiliary Power Supply (Aux 1, Aux 2, Unfiltered) | | | | | = | Alarm | = |
| Total currents (Add above currents) | | | | STANDBY | (**A**) | | (**B**) |

**Battery Capacity Requirement**

Battery (Ah) = (Standby Current Total x Discharge Time) + (Alarm Current Total x Alarm Time)

([STANDBY (A) _____ ] X [(24 Hours) ___ ]) + ([ALARM (B) _____ ] X [Alarm in Hr.] _____) = (C) _____Ah

Total Alarm Current must be **5** amperes or less. NAC Circuits must not exceed **5** amperes.

**Battery Selection**

Battery Size = Multiply (**C**) by 1.20 to derate battery.

See the following table for the recommended Secutron batteries for use with this panel

**Table 21 Recommended Batteries**

| Battery Model | Battery Size |
|---|---|
| **BAT-12V12A** | 12Ah |
| **BAT-12V18A** | 18Ah |
| **BAT-12V26A** | 26Ah |

BAT-12V12A (12 Ah) and BAT-12V18A (18 Ah) will fit into the MR-400 enclosure.

To house BAT-12V26A (26 Ah) batteries an external BC-160 Battery Cabinet is required.

Use of alternative batteries may result in failure of the panel to meet agency and regulatory requirements, and may result in shortened battery life. Batteries should be tested regularly, and replaced at least every three years. If the Battery Trouble indicator activates, obtain required service.

# 13.0 Warranty and Warning Information

## WARNING!

Please read this document **CAREFULLY**, as it contains important warnings, life-safety, and practical information about all products manufactured by the Mircom Group of Companies, including Mircom and Secutron branded products, which shall include without limitation all fire alarm, nurse call, building automation and access control and card access products (hereinafter individually or collectively, as applicable, referred to as "**Mircom System**").

## NOTE TO ALL READERS:

1. **Nature of Warnings.** The within warnings are communicated to the reader out of an abundance of caution and create no legal obligation for Mircom Group of Companies, whatsoever. Without limiting the generality of the foregoing, this document shall NOT be construed as in any way altering the rights and obligations of the parties, governed by the legal documents that apply in any given circumstance.
2. **Application.** The warnings contained in this document apply to all Mircom System and shall be read in conjunction with:
   a. the product manual for the specific Mircom System that applies in given circumstances;
   b. legal documents that apply to the purchase and sale of a Mircom System, which may include the company's standard terms and conditions and warranty statements;
   c. other information about the Mircom System or the parties' rights and obligations as may be application to a given circumstance.
3. **Security and Insurance.** Regardless of its capabilities, no Mircom System is a substitute for property or life insurance. Nor is the system a substitute for property owners, renters, or other occupants to act prudently to prevent or minimize the harmful effects of an emergency situation. Building automation systems produced by the Mircom Group of Companies are not to be used as a fire, alarm, or life-safety system.

## NOTE TO INSTALLERS:

All Mircom Systems have been carefully designed to be as effective as possible. However, there are circumstances where they may not provide protection. Some reasons for system failure include the following. As the only individual in contact with system users, please bring each item in this warning to the attention of the users of this Mircom System. Failure to properly inform system end-users of the circumstances in which the system might fail may result in over-reliance upon the system. As a result, it is imperative that you properly inform each customer for whom you install the system of the possible forms of failure:

4. **Inadequate Installation.** All Mircom Systems must be installed in accordance with all the applicable codes and standards in order to provide adequate protection. National standards require an inspection and approval to be conducted by the local authority having jurisdiction following the initial installation of the system and following any changes to the system. Such inspections ensure installation has been carried out properly.
5. **Inadequate Testing.** Most problems that would prevent an alarm a Mircom System from operating as intended can be discovered by regular testing and maintenance. The complete system should be tested by the local authority having jurisdiction immediately after a fire, storm, earthquake, accident, or any kind of construction activity inside or outside the premises.

The testing should include all sensing devices, keypads, consoles, alarm indicating devices and any other operational devices that are part of the system.

## NOTE TO USERS:

All Mircom Systems have been carefully designed to be as effective as possible. However, there are circumstances where they may not provide protection. Some reasons for system failure include the following. The end user can minimize the occurrence of any of the following by proper training, testing and maintenance of the Mircom Systems:

6. **Inadequate Testing and Maintenance.** It is imperative that the systems be periodically tested and subjected to preventative maintenance. Best practices and local authority having jurisdiction determine the frequency and type of testing that is required at a minimum. Mircom System may not function properly, and the occurrence of other system failures identified below may not be minimized, if the periodic testing and maintenance of Mircom Systems is not completed with diligence and as required.
7. **Improper Operation.** It is important that all system users be trained in the correct operation of the alarm system and that they know how to respond when the system indicates an alarm. A Mircom System may not function as intended during an emergency situation where the user is unable to operate a panic or emergency switch by reason of permanent or temporary physical disability, inability to reach the device in time, unfamiliarity with the correct operation, or related circumstances.
8. **Insufficient Time.** There may be circumstances when a Mircom System will operate as intended, yet the occupants will not be protected from the emergency due to their inability to respond to the warnings in a timely manner. If the system is monitored, the response may not occur in time enough to protect the occupants or their belongings.
9. **Carelessness or Safety Hazards.** Moreover, smoke detectors may not provide timely warning of fires caused by carelessness or safety hazards such as smoking in bed, violent explosions, escaping gas, improper storage of flammable materials, overloaded electrical circuits or children playing with matches or arson.
10. **Power Failure.** Some Mircom System components require adequate electrical power supply to operate. Examples include: smoke detectors, beacons, HVAC, and lighting controllers. If a device operates only by AC power, any interruption, however brief, will render that device inoperative while it does not have power. Power interruptions of any length are often accompanied by voltage fluctuations which may damage Mircom Systems or other electronic equipment. After a power interruption has occurred, immediately conduct a complete system test to ensure that the system operates as intended.
11. **Battery Failure.** If the Mircom System or any device connected to the system operates from batteries it is possible for the batteries to fail. Even if the batteries have not failed, they must be fully charged, in good condition, and installed correctly. Some Mircom Systems use replaceable batteries, which have a limited life-span. The expected battery life is variable and in part dependent on the device environment, usage and type. Ambient conditions such as high humidity, high or low temperatures, or large temperature fluctuations may reduce the expected battery life. Moreover, some Mircom Systems do not have a battery monitor that would alert the user in the event that the battery is nearing its end of life. Regular testing and replacements are vital for ensuring that the batteries function as expected, whether or not a device has a low-battery monitor.
12. **Physical Obstructions.** Motion sensors that are part of a Mircom System must be kept clear of any obstacles which impede the sensors' ability to detect movement. Signals being communicated by a Mircom System may not reach the receiver if an item (such as metal, water, or concrete) is placed on or near the radio path. Deliberate jamming or other inadvertent radio signal interference can also negatively affect system operation.

13. **Wireless Devices Placement Proximity.** Moreover all wireless devices must be a minimum and maximum distance away from large metal objects, such as refrigerators. You are required to consult the specific Mircom System manual and application guide for any maximum distances required between devices and suggested placement of wireless devices for optimal functioning.
14. **Failure to Trigger Sensors.** Moreover, Mircom Systems may fail to operate as intended if motion, heat, or smoke sensors are not triggered.
    a. Sensors in a fire system may fail to be triggered when the fire is in a chimney, walls, roof, or on the other side of closed doors. Smoke and heat detectors may not detect smoke or heat from fires on another level of the residence or building. In this situation the control panel may not alert occupants of a fire.
    b. Sensors in a nurse call system may fail to be triggered when movement is occurring outside of the motion sensors' range. For example, if movement is occurring on the other side of closed doors or on another level of the residence or building the motion detector may not be triggered. In this situation the central controller may not register an alarm signal.
15. **Interference with Audible Notification Appliances.** Audible notification appliances may be interfered with by other noise sources such as stereos, radios, televisions, air conditioners, appliances, or passing traffic. Audible notification appliances, however loud, may not be heard by a hearing-impaired person.
16. **Other Impairments.** Alarm notification appliances such as sirens, bells, horns, or strobes may not warn or waken a sleeping occupant if there is an intervening wall or door. It is less likely that the occupants will be alerted or awakened when notification appliances are located on a different level of the residence or premise.
17. **Software Malfunction.** Most Mircom Systems contain software. No warranties are provided as to the software components of any products or stand-alone software products within a Mircom System. For a full statement of the warranties and exclusions and limitations of liability please refer to the company's standard Terms and Conditions and Warranties.
18. **Telephone Lines Malfunction.** Telephone service can cause system failure where telephone lines are relied upon by a Mircom System. Alarms and information coming from a Mircom System may not be transmitted if a phone line is out of service or busy for a certain period of time. Alarms and information may not be transmitted where telephone lines have been compromised by criminal tampering, local construction, storms or earthquakes.
19. **Component Failure.** Although every effort has been made to make this Mircom System as reliable as possible, the system may fail to function as intended due to the failure of a component.
20. **Integrated Products.** Mircom System might not function as intended if it is connected to a non-Mircom product or to a Mircom product that is deemed non-compatible with a particular Mircom System. A list of compatible products can be requested and obtained.

# Warranty

**Purchase of all Mircom products is governed by:**

https://www.mircom.com/product-warranty

https://www.mircom.com/purchase-terms-and-conditions

https://www.mircom.com/software-license-terms-and-conditions

Secutron™



www.secutron.com

CANADA - Main Office
25 Interchange Way
Vaughan, ON L4K 5W3
Tel: (905) 660-4655
(888) 660-4655
Fax: (905) 660-4113

U.S.A
4575 Witmer Industrial Estates
Niagara Falls, NY 14305
Tel: (905) 660-4655
(888) 660-4655
Fax: (905) 660-4113