25 Interchange way, Vaughan Ontario. L4K 5W3
Phone: 905.660.4655; Fax: 905.660.4113
Web: www.secutron.com

INSTALLATION AND MAINTENANCE INSTRUCTIONS

MRI-4046 MULTI-USE OUTPUT MODULE

ABOUT THIS MANUAL

This manual is included as a quick reference for installation. For further information on the use of this device with a FACP, please refer to the panel's manual.

Note: This manual should be left with the owner/operator of this equipment.

MODULE DESCRIPTION

The MRI-4046 Output module is designed to operate with a listed compatible intelligent fire system control panel. This module can control speakers, NACs or Fire-Phones. Selection of which mode the module will operate in is made through the panel configuration tool. The module is compatible with FT-300A and FH-100A Fire-Phones and supervision/busy tone on is provided for off-hook handset. The module supports one output circuit, rated at 2A @ 24VDC/25VRMS or 0.5A at 70VRMS, configured as Class A or Class B. An internal EOL resistor is provided for Class A operation. The module supports group activation capability for fast reaction time. The address of each module is set using the MIX-4090 programmer tool and up to 240 units may be installed on a single loop. The module has a panel controlled LED indicator.

FIGURE 1: MODULE FRONT

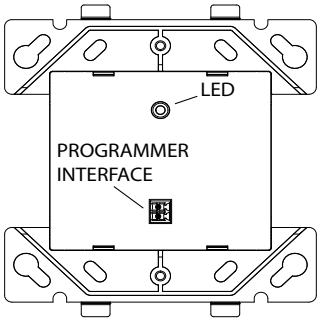

SPECIFICATIONS

Normal Operating Voltage:	15 to 30VDC
Alarm Current:	2.5mA
Standby Current:	1.8mA with 22k EOL (No EOL resistor required when operated in Class A on load side)
Max Fire Phone Wiring Resistance	150 Ohms
Max NAC Wiring Resistance	see Table 1
Max Speaker Wiring Resistance	see Table 2 & 3
Temperature Range:	32°F to 120°F (0°C to 49°C)
Humidity:	10% to 93% Non-condensing
Dimensions:	4 5/8" H x 4 1/4" W x 1 1/8" D
Mounting:	4" square by 2 1/8" deep box double-gang box
Accessories:	MIX-4090 Programmer BB-400 surface mounted backbox MP-302 EOL on mounting plate
Wiring range on all terminals:	22 to 12 AWG

MOUNTING

Notice: You must disconnect power from the system before installing the module. If this unit is being installed in a system that is currently operational, it is necessary to inform the operator and the local authority that the system will be temporarily out of service.

The MRI-4046 module is intended to be mounted in a standard 4" square back-box (see Figure 2) or double-gang electrical box. The box must have a minimum depth of 2 1/8 inches. Surface mounted electrical boxes (BB-400) are available.

FIGURE 2: MODULE MOUNTING

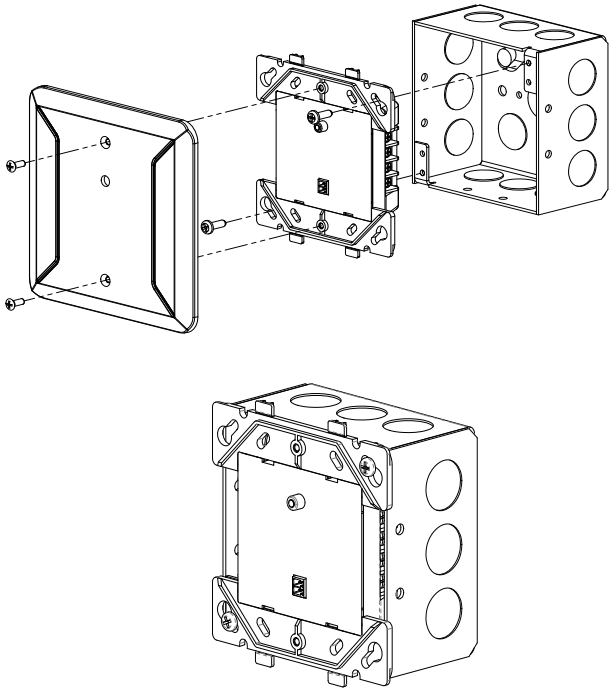

WIRING

Note: This device should be installed as per applicable requirements of the authorities having jurisdiction.

1. Use the programmer tool to set the address on the module as indicated on the job drawings.
   CAUTION: To set the address on this device, disconnect it from the loop, or ensure that the loop to which it is connected is both disconnected from the panel and shorted across the SLC+ and SLC− inputs at the device. Failing to take either of these steps may change the address programming of previously configured sensors on the same loop.
2. Install the module wiring as indicated by the job drawings and appropriate wiring diagrams (see Figures 3 through 8 for examples of wiring different devices).
3. Mount the module in the electrical box as shown in figure 2.

Note: The external power source must be Listed for use in Fire alarm systems. Power connection to the module must be monitored for integrity with built-in or external Listed end of line relay.

LT-6144SEC rev 0 3/13/23

FIGURE 3: SAMPLE CLASS A FIRE PHONE WIRING:

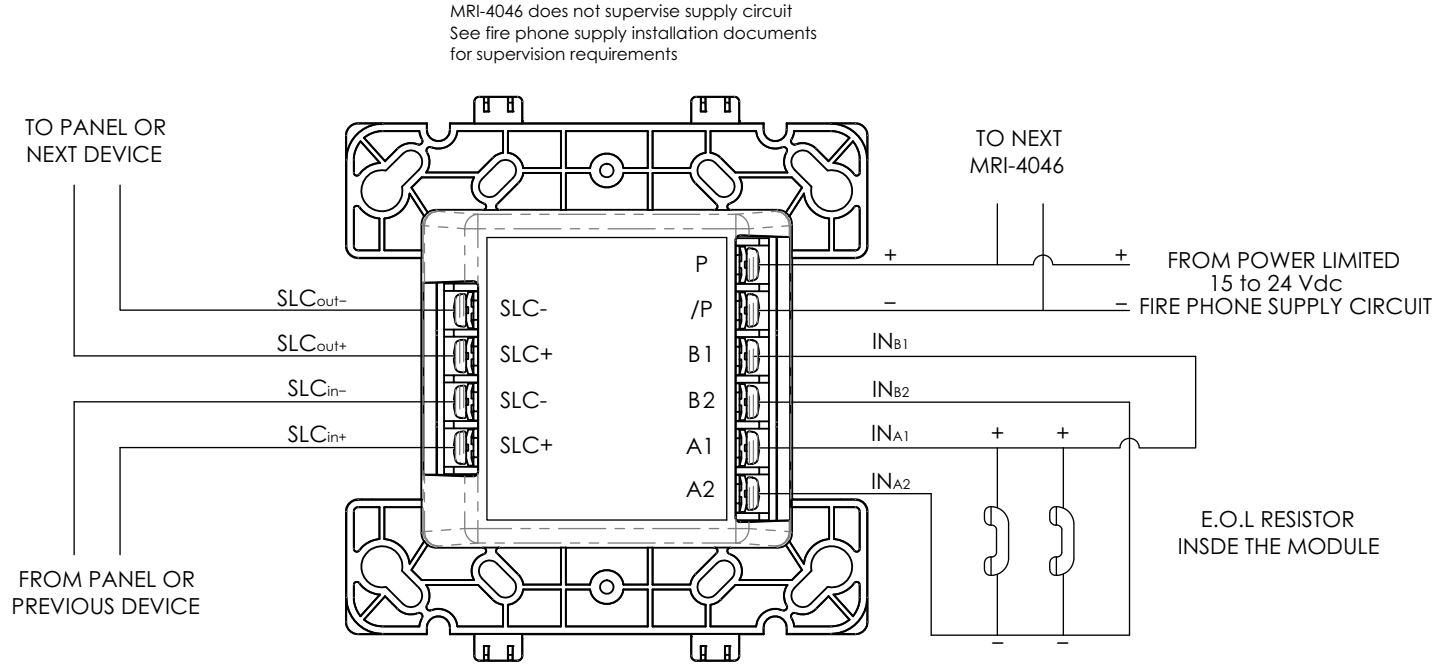

FIGURE 4: SAMPLE CLASS B FIRE PHONE WIRING:

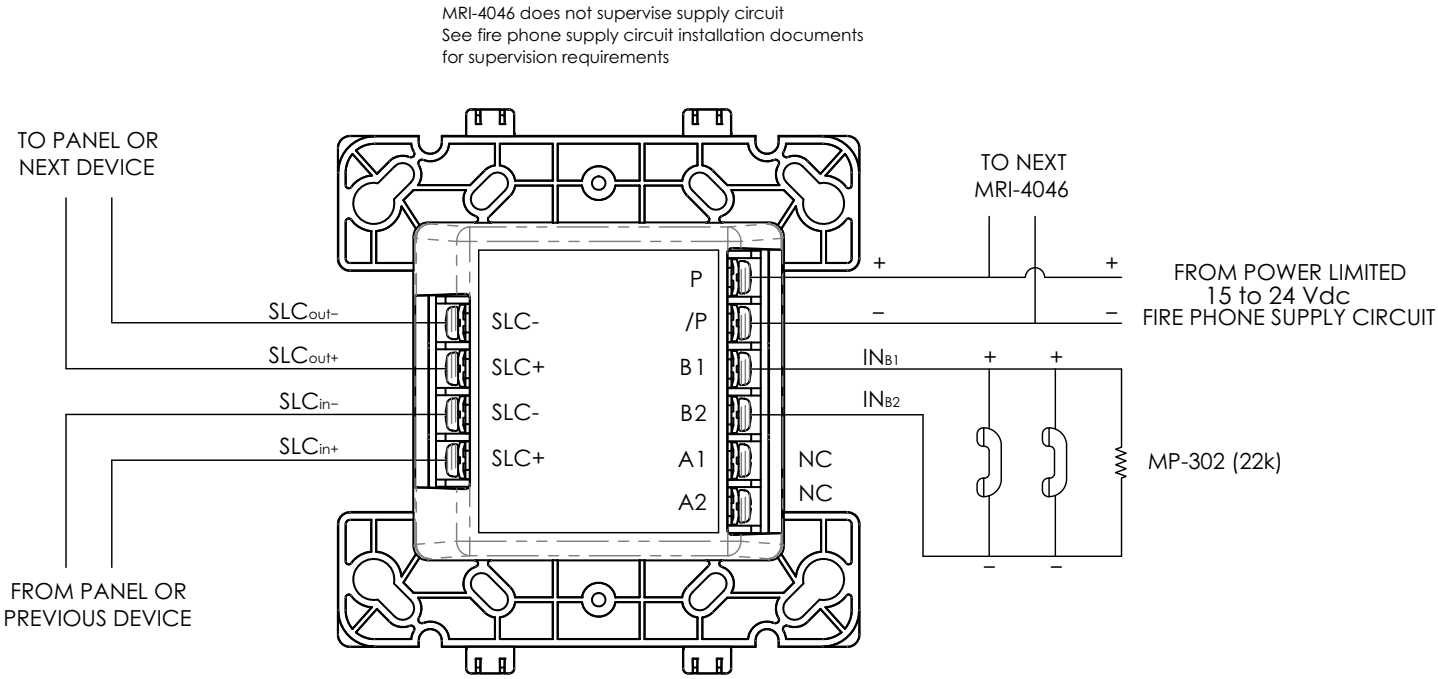

FIGURE 5: SAMPLE CLASS A NAC WIRING

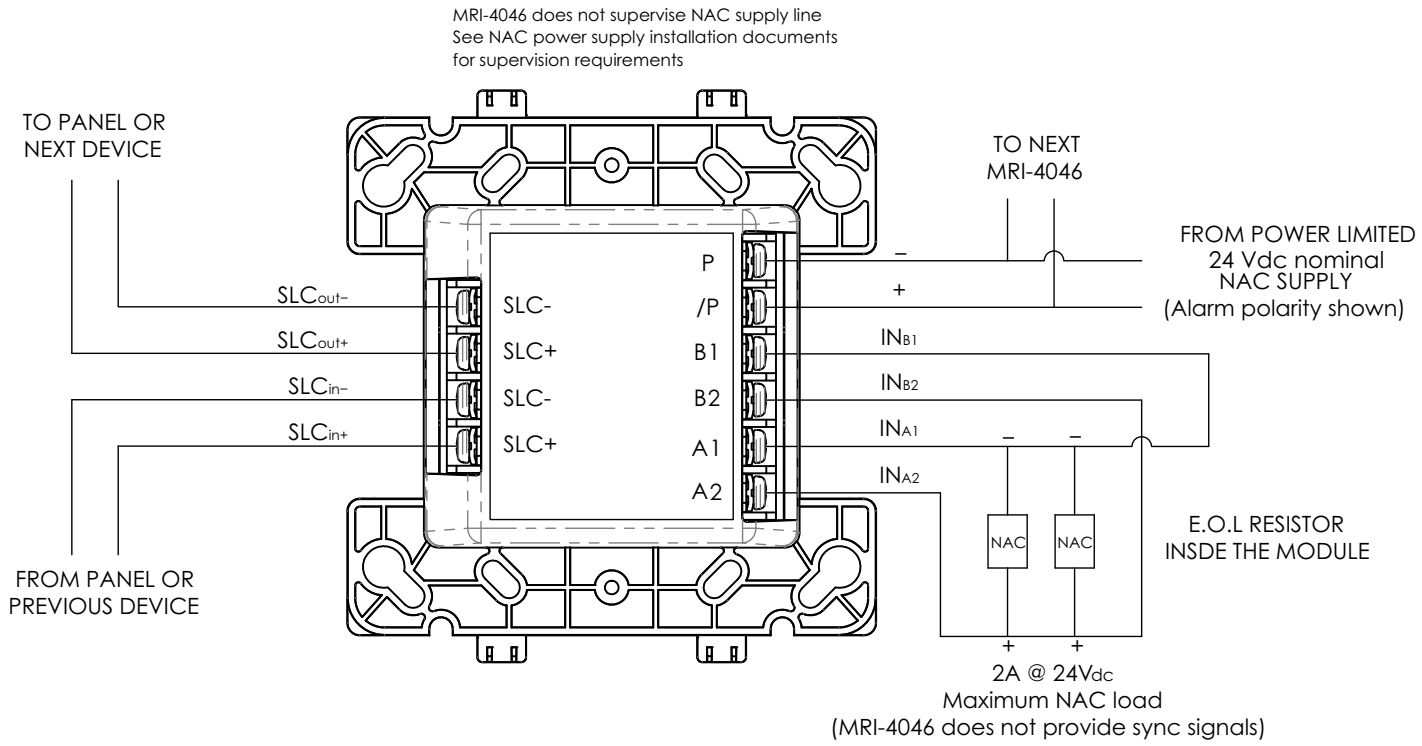

FIGURE 6: SAMPLE CLASS B NAC WIRING

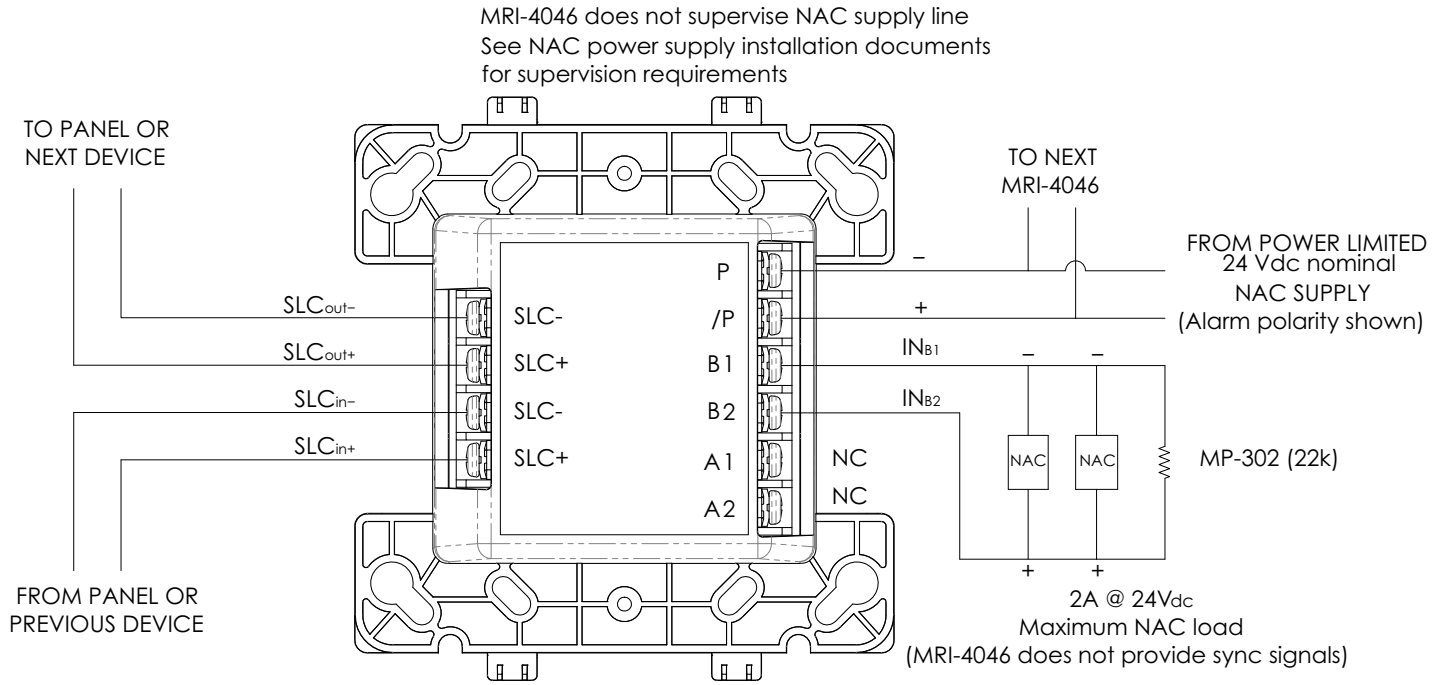

FIGURE 7: SAMPLE CLASS A SPEAKER WIRING

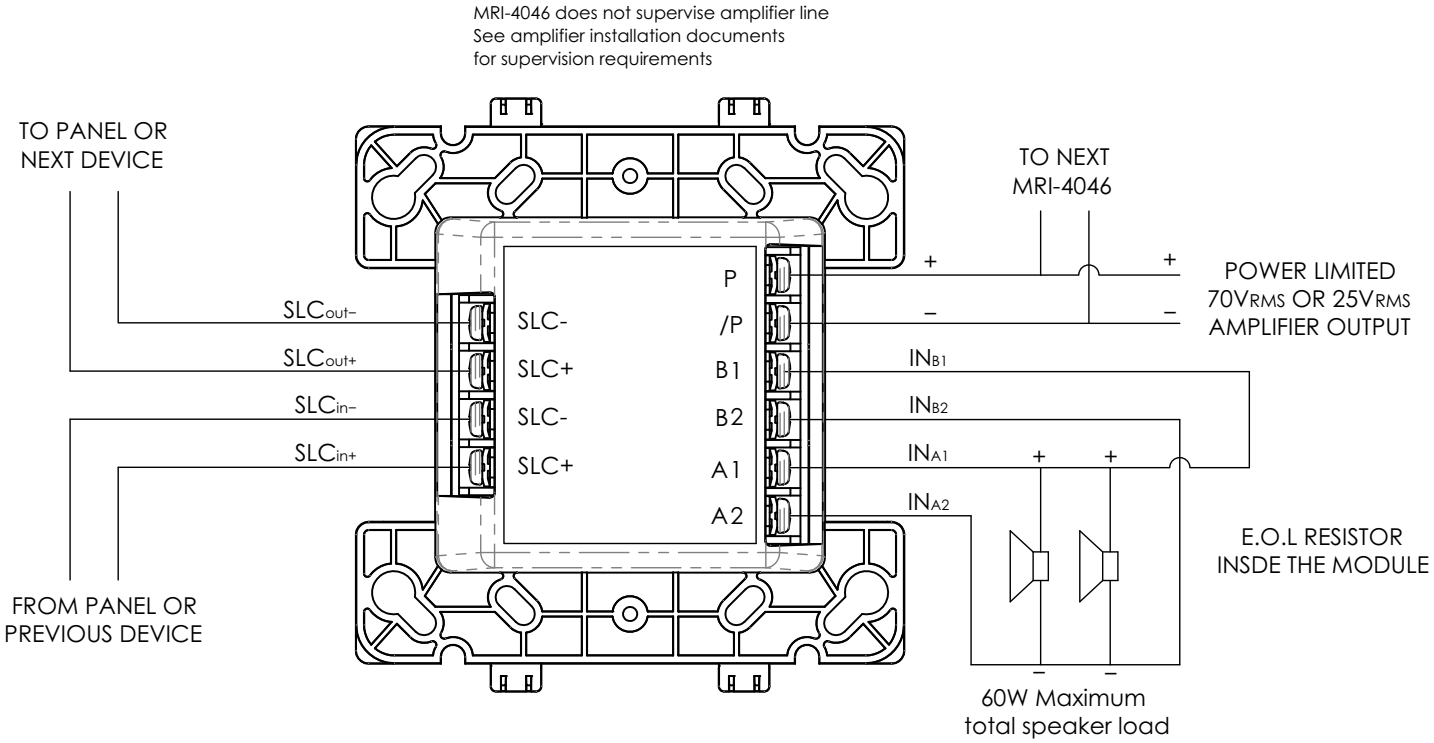

FIGURE 8: SAMPLE CLASS B SPEAKER WIRING

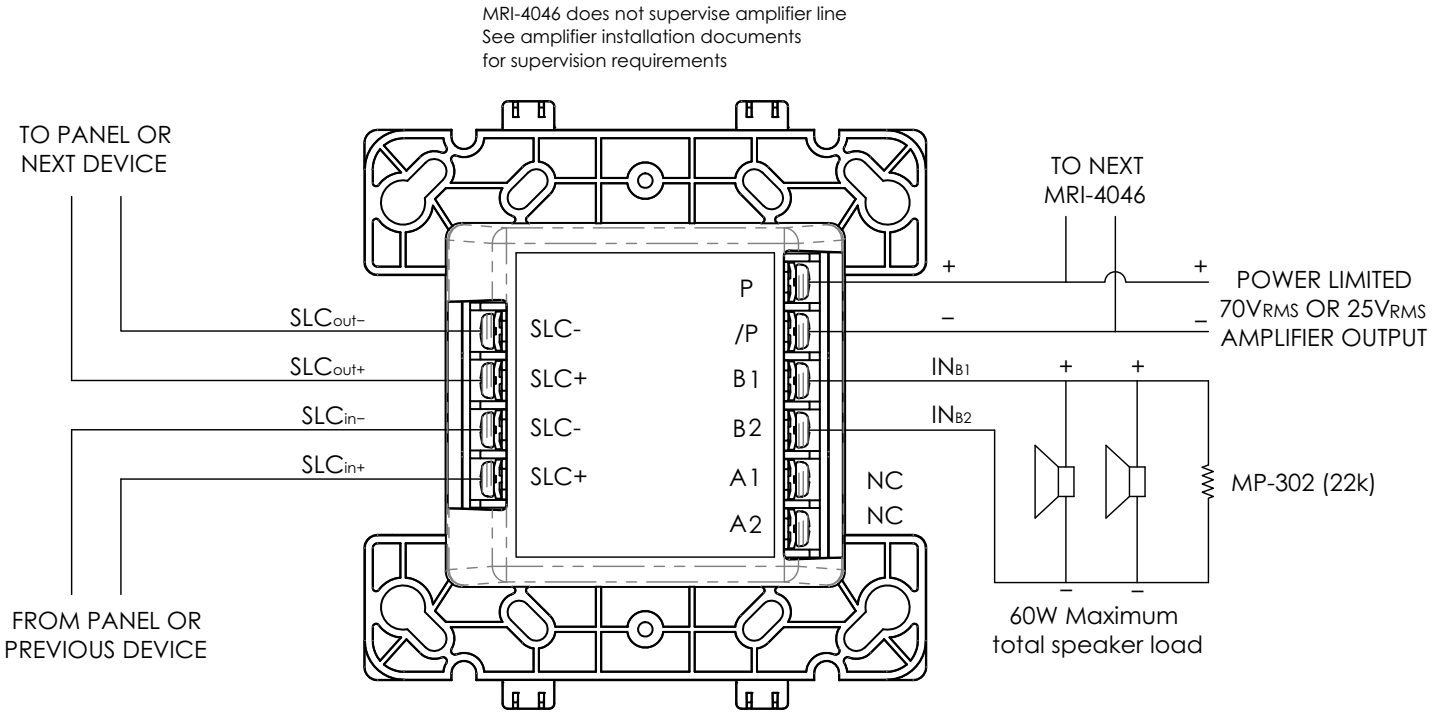

Table 1, NAC wiring selection:

The total drop from the power supply output to the devices should not exceed 1.8V based on the use of NAC from Secutron FACPs. This includes the riser drop and the MRI-4046 device line drop. If the riser is connected to several MRI-4046, the total riser load current must be used to calculate drop. The following tables provide a useful approximation

Maximum riser length from power supply to last MRI-4046				
Riser current	**#18AWG**	**#16AWG**	**#14AWG**	**#12AWG**
500mA	210ft (64m)	335ft (102m)	535ft (163m)	850ft (259m)
1A	105ft (32m)	165ft (51m)	265ft (82m)	425ft (130m)
1.5A	70ft (21m)	110ft (34m)	175ft (54m)	280ft (86m)
2A	50ft (16m)	80ft (26m)	130ft (41m)	210ft (65m)
2.5A	40ft (13m)	65ft (21m)	105ft (33m)	170ft (52m)

Maximum line length from MRI-4046 to last device with worst case riser loss				
Line current	**#18AWG**	**#16AWG**	**#14AWG**	**#12AWG**
100mA	350ft (107m)	560ft (171m)	890ft (272m)	1400ft (432m)
250ma	140ft (43m)	220ft (68m)	355ft (109m)	565ft (173m)
500ma	70ft (21m)	110ft (34m)	175ft (54m)	280ft (35m)
1A	35ft (11m)	55ft (17m)	90ft (27m)	140ft (43m)
2A	15ft (5m)	25ft (9m)	45ft (14m)	70ft (22m)

Table 2, speaker line wire selection (70VRMS line)

The maximum voltage drop on a 70V line should not exceed 7V from the amplifier to the last speaker to limit power loss to 1dB. The following tables provide a useful approximation.

Maximum riser length from amplifier to last MRI-4046				
Riser Wattage	**#18AWG**	**#16AWG**	**#14AWG**	**#12AWG**
15W	1900ft (584m)	3000ft (929m)	4900ft (1479m)	7700ft (3135m)
30W	950ft (290m)	1525ft (460m)	2425ft (740m)	3850ft (1175m)
60W	480ft (145m)	760ft (230m)	1210ft (370m)	1925ft (585m)

Maximum line length from MRI-4046 to last speaker with worst case riser loss				
Line Wattage	**#18AWG**	**#16AWG**	**#14AWG**	**#12AWG**
7.5W	1275ft (390m)	2030ft (620m)	3235ft (986m)	5140ft (1570m)
15W	640ft (195m)	1015ft (310m)	1615ft (493m)	2570ft (784m)
30W	320ft (97m)	505ft (155m)	805ft (247m)	1285ft (392m)

Table 3, speaker line wire selection (25VRMS line)

The maximum voltage drop on a 25V line should not exceed 2.5V from the amplifier the last speaker to limit power loss to 1dB. The following tables provide a useful approximation.

Maximum riser length from amplifier to last MRI-4046				
Riser Wattage	**#18AWG**	**#16AWG**	**#14AWG**	**#12AWG**
15W	245ft (75m)	390ft (120m)	615ft (190m)	980ft (300m)
30W	120ft (37m)	195ft (60m)	310ft (94m)	490ft (150m)
60W	60ft (19m)	95ft (30m)	155ft (47m)	245ft (75m)

Maximum line length from MRI-4046 to last speaker with worst case riser loss				
Line Wattage	**#18AWG**	**#16AWG**	**#14AWG**	**#12AWG**
7.5W	165ft (50m)	300ft (79m)	410ft (126m)	655ft (200m)
15W	80ft (25m)	130ft (40m)	205ft (63m)	330ft (100m)
30W	40ft (12m)	65ft (20m)	100ft (31m)	165ft (50m)