25 Interchange way, Vaughan Ontario. L4K 5W3
Phone: 905.660.4655; Fax: 905.660.4113
Web: www.secutron.com

INSTALLATION AND MAINTENANCE INSTRUCTIONS

MRI-4040 DUAL INPUT MODULE

ABOUT THIS MANUAL

This manual is included as a quick reference for installation. For further information on the use of this device with a FACP, please refer to the panel's manual.

Note: This manual should be left with the owner/operator of this equipment.

MODULE DESCRIPTION

The MRI-4040 Dual Input module is designed to operate with a listed compatible intelligent fire system control panel. The module can support one Class A or 2 Class B inputs. When configured for Class A operation, the module provides an internal EOL resistor. When configured for Class B operation, the module can monitor two independent input circuits while using only one module address. The address of each module is set using the MIX-4090 programmer tool and up to 240 units may be installed on a single loop. The module has a panel controlled LED indicator.

FIGURE 1: MODULE FRONT

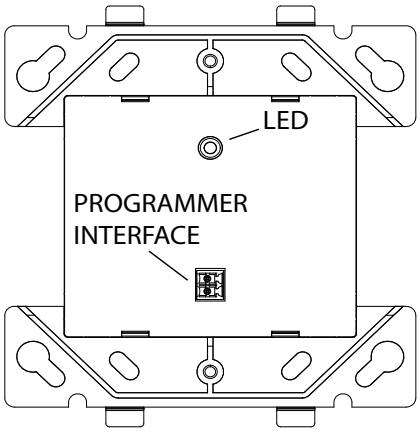

SPECIFICATIONS

Normal Operating Voltage:	15 to 30VDC
Alarm Current:	3.3mA
Standby Current:	2mA with two 22k EOL (No EOL resistor required when operated in Class A on load side)
EOL Resistance:	22k Ohms
Maximum Input Wiring Resistance:	150 Ohms total
Temperature Range:	32°F to 120°F (0°C to 49°C)
Humidity:	10% to 93% Non-condensing
Dimensions:	4 5/8" H x 4 1/4" W x 1 1/8" D
Mounting:	4" square by 2 1/8" deep box or double-gang box
Accessories:	MIX-4090 Programmer BB-400 surface mounted backbox MP-302 EOL on mounting plate
Wiring range on all terminals:	22 to 12 AWG

MOUNTING

Notice: You must disconnect power from the system before installing the module. If this unit is being installed in a system that is currently operational, it is necessary to inform the operator and the local authority that the system will be temporarily out of service.

The MRI-4040 module is intended to be mounted in a standard 4" square back-box (see figure 2) or a double-gang electrical box. The box must have a minimum depth of 2 1/8 inches. Surface mounted electrical boxes (BB-400) are available.

FIGURE 2: MODULE MOUNTING

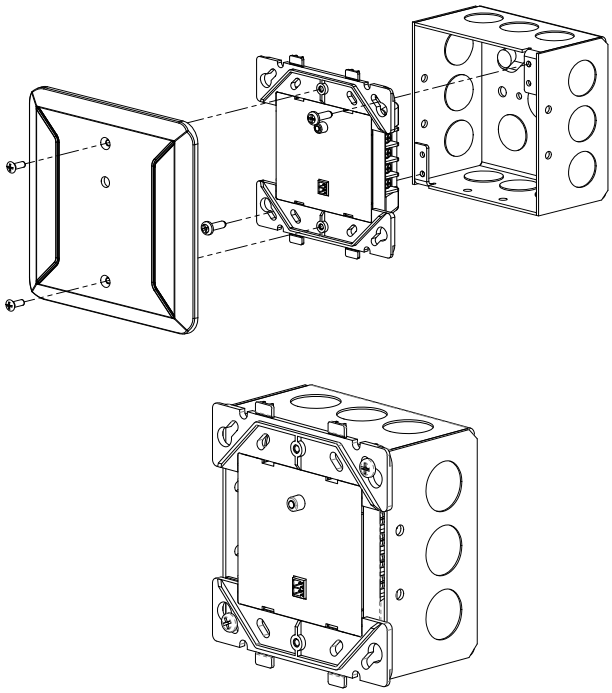

WIRING

Note: This device should be installed as per applicable requirements of the authorities having jurisdiction. This device shall be connected to power limited circuits only.

1. Use the programmer tool to set the address on the module as indicated on the job drawings.
   CAUTION: To set the address on this device, disconnect it from the loop, or ensure that the loop to which it is connected is both disconnected from the panel and shorted across the SLC+ and SLC− inputs at the device. Failing to take either of these steps may change the address programming of previously configured sensors on the same loop.
2. Install the module wiring as indicated by the job drawings and appropriate wiring diagrams (see figure 3 for an example of wring for a Class A connected device and figure 4 for an example of Class B)
3. Mount the module in the electrical box as shown in figure 2.

LT-6139SEC rev 0 3/13/23

FIGURE 3: SAMPLE CLASS A WIRING

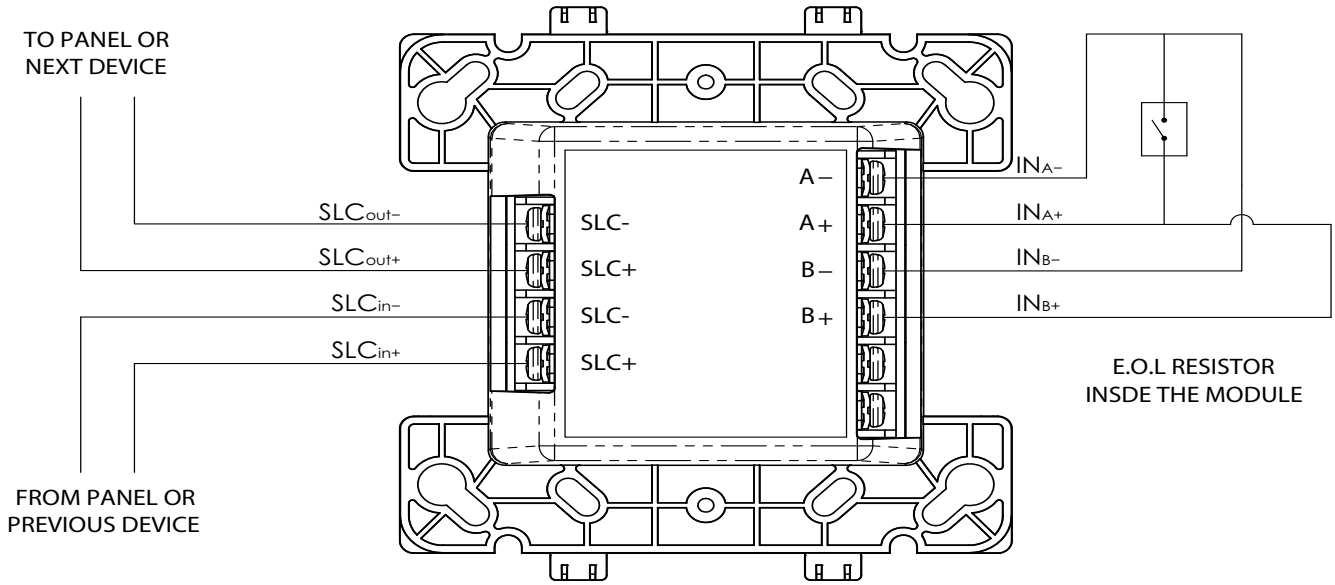

FIGURE 4: SAMPLE CLASS B WIRING